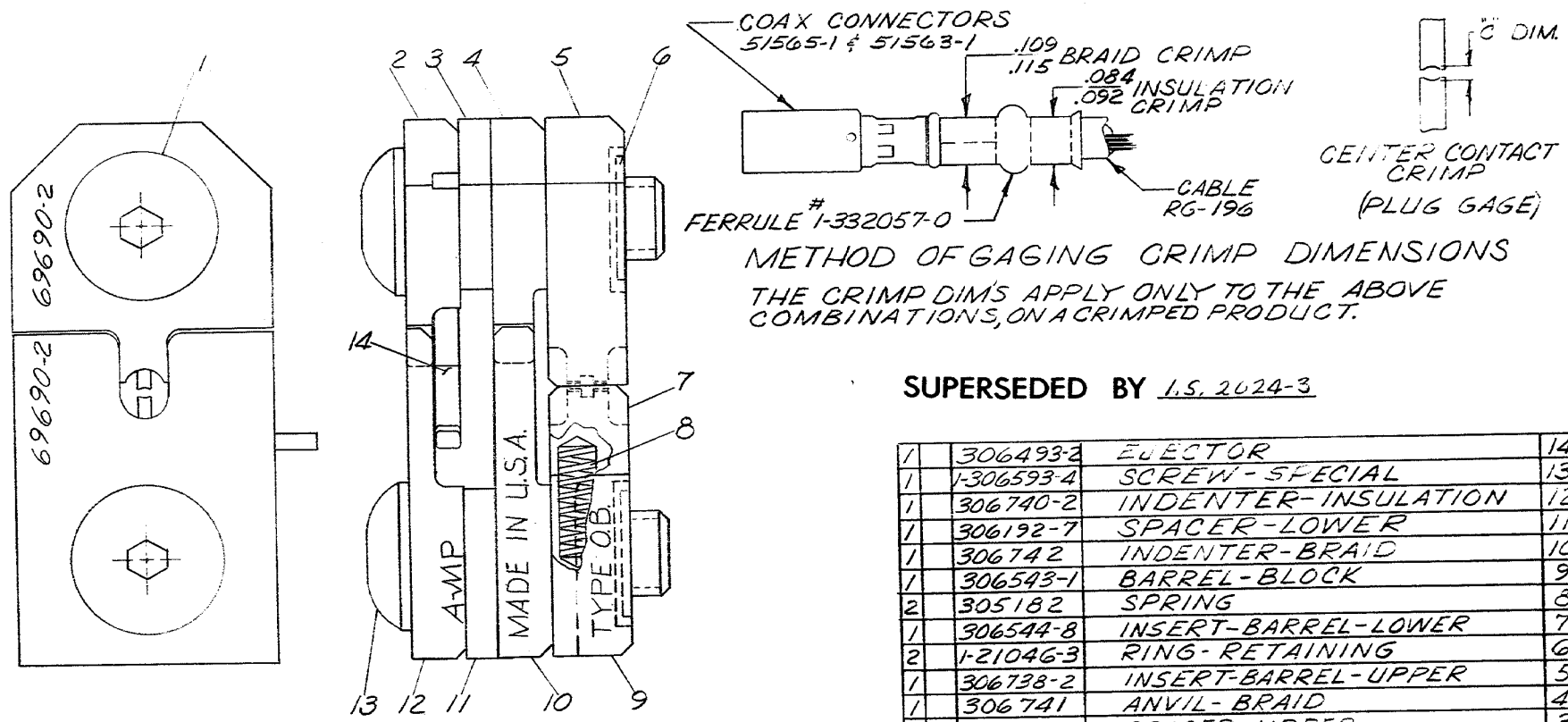

METHOD OF GAGING CRIMP DIMENSIONS

THE CRIMP DIM'S APPLY ONLY TO THE ABOVE COMBINATIONS, ON A CRIMPED PRODUCT.

SUPERSEDED BY I.S. 2024-3

"C" DIM	
GO	NO GO
.013	.017

DWG SIZE	NUMBER	NAME	REMARKS	ITEM NO
1	306493-2	EJECTOR		14
1	1-306593-4	SCREW-SPECIAL		13
1	306740-2	INDENTER-INSULATION		12
1	306192-7	SPACER-LOWER		11
1	306742	INDENTER-BRAID		10
1	306543-1	BARREL-BLOCK		9
2	305182	SPRING		8
1	306544-8	INSERT-BARREL-LOWER		7
2	1-21046-3	RING-RETAINING		6
1	306738-2	INSERT-BARREL-UPPER		5
1	306741	ANVIL-BRAID		4
1	1-306191-0	SPACER-UPPER		3
1	306739-2	ANVIL-INSULATION		2
1	7-306131-2	SCREW-SPECIAL		1

LTR	REVISION RECORD	DR	CHK	DATE
D	SUP. By I.S. 2024-3	EJF	EJF	5-16-23
C-1	REVISED	PL		11-17-70
C	REVISED	B.S.		6-26-68
B	REVISED	B.S.		3-12-68
A	REVISED	PL	AF	11-24-67

NUMBER 69690-2

REQUIRED PER ASSEMBLY

DESCRIPTION

©1966 BY AMP INCORPORATED. ALL RIGHTS RESERVED. AMP PRODUCTS COVERED BY PATENTS AND/OR PATENTS PENDING.

CUSTOMER COPY REFERENCE ONLY

DR B. Shenfeld 2-1-66

CHK 2-2-66

DE 2-28-66

MATERIAL AND FINISH

WIRE – RANGE – INSULATION RG 196

TOLERANCE EXCEPT AS NOTED ± .015 ± 1° 0'

SCALE 4-1

AMP INCORPORATED HARRISBURG, PENNA.

CLASS

TYPE SUB MIN. COAX

LOC M B NO. 69690-2 REV D

NAME DIE ASSEMBLY

DIMENSIONS IN INCHES. DO NOT SCALE PRINT.

PRINT DIST

AMP 1253 REV 7/60

Downloaded from Elcodis.com electronic components distributor