DRAWING MADE IN AMERICAN PROJECTION

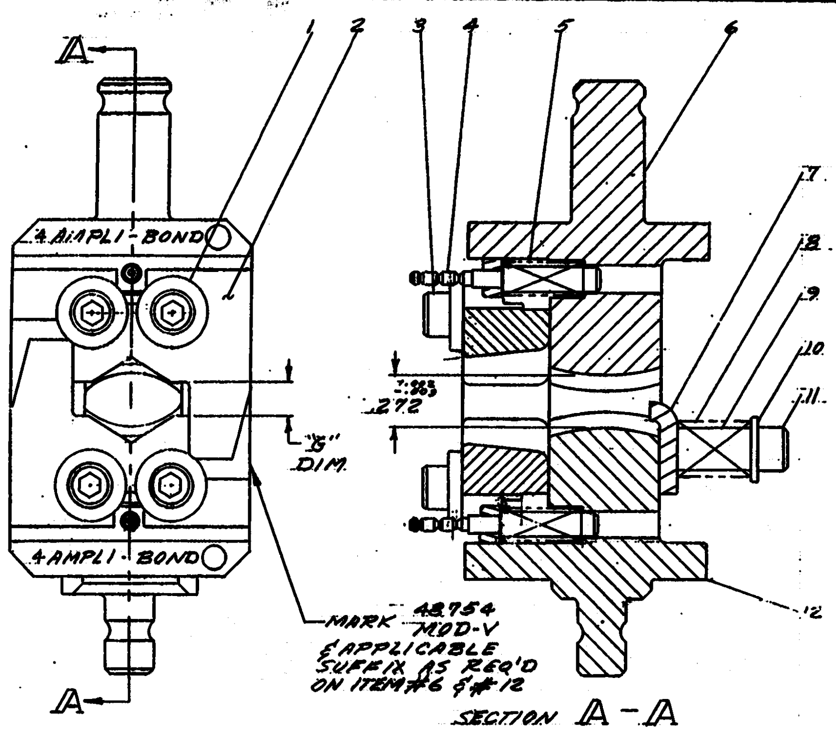

1 ALL MARKING .06 CHARS APPROX AS SHOWN PER (AMP 106-7008)

2 FILL DRILL POINTS WITH YELLOW LACQUER

3 ENG. CONTROL ONLY - 48754

"G" WITH KEYS AT #1
.172 ±.008

-1		DWG SIZE	NUMBER	NAME	REMARKS	ITEM NO
1	1	C	308032-3	INDENTER		12
2	2	—	2-21000-8	SCREW		11
2	2	C	1-59681-8	WASHER		10
2	2	C	306363	SLEEVE		9
2	2	D	3-304668-5	SPRING		8
1	1	B	307130-2	LOCATOR		7
1	1	C	308031-3	ANVIL		6
2	2	D	302380	SPRING		5
2	2	A	301905	ADJUSTMENT KEY ASS'Y		4
4	4	—	4-23657-8	SCREW		3
2	2	C	301913	INSERT INSULATION		2
4	4	C	306098-3	WASHER		1

REQUIRED PER ASSEMBLY — 48754-1, 48754

MATERIAL — HEAT TREAT — COATING OR PLATING —

WIRE RANGE 4

AREA

UNLESS OTHERWISE SPECIFIED: REMOVE BURRS, BREAK SHARP EDGES .015 R MAX. DECIMALS: .00 ± .02, .000 ± .005, .0000 ± .0005. ANGLES: ± 0° 30'

CLASS — TYPE AMPLI-BOND HOUR GLASS PIDG

DR 11-2-73 — CHK 11-2-73 — APP — REL 11-2-73

FIRST USED 69061

P.P.F. —

AMP INCORPORATED HARRISBURG, PENNA.

LOC M — B — NO 48754 — REV V

SCALE 2-1

NAME DIE ASSEMBLY MOD-V

LTR	REVISION RECORD	ECN	DR	DATE
V	REDRAWN & REV PER E.C.N. D-7871	—		11-5-73

NUMBER 48754

DIST 12 — PRINT V

THIS INFORMATION IS CONFIDENTIAL AND IS DISCLOSED TO YOU ON CONDITION THAT NO FURTHER DISCLOSURE IS MADE BY YOU TO OTHER THAN AMP PERSONNEL WITHOUT WRITTEN AUTHORIZATION FROM AMP INCORPORATED, HARRISBURG, PA.

DIMENSIONS IN INCHES DO NOT SCALE PRINT

535-00-00A

Downloaded from Elcodis.com electronic components distributor