THIS DRAWING IS UNPUBLISHED. RELEASED FOR PUBLICATION 20

© COPYRIGHT 20 BY TYCO ELECTRONICS CORPORATION. ALL RIGHTS RESERVED.

LOC	DIST
J	-

REVISIONS

P	LTR	DESCRIPTION	DATE	DWN	APVD
	B	REVISED FJ00-0877-01	07-May-01	J.K	S.Y

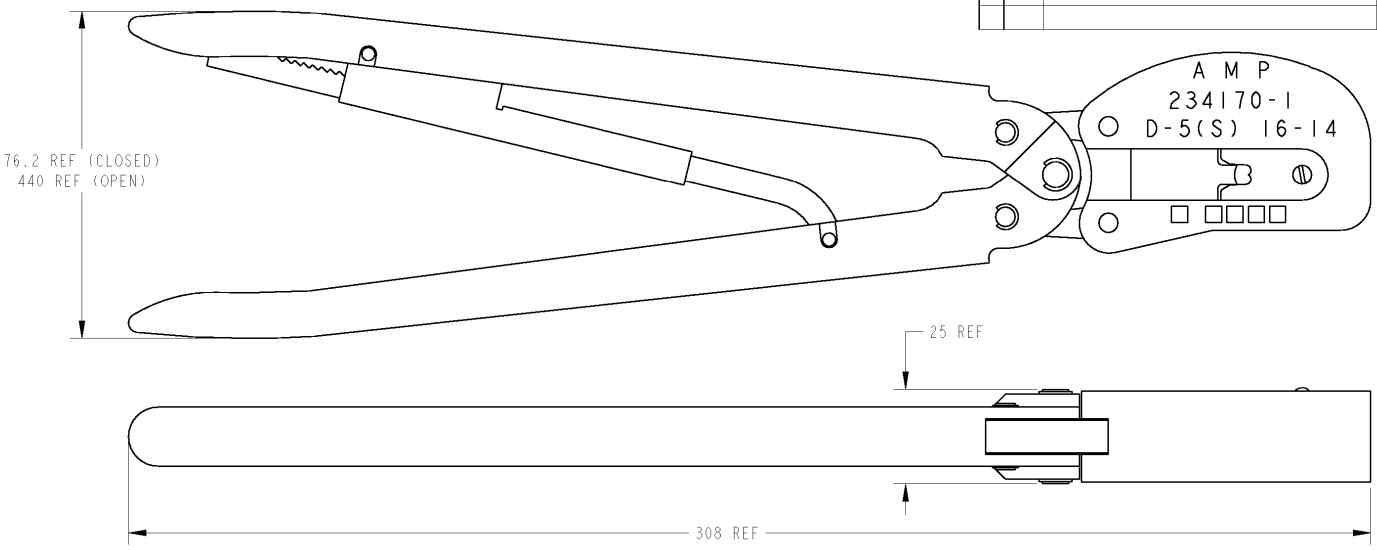

CRIMP SYMBOL	TERMINAL NO	WIRE SIZE AWG(mm²)	INS RANGE (mm)	TERMINAL CH(mm)		IS NO	APPL SPEC	WEIGHT (g)
	L.P.			WIRE	INS			
圧着部記号	適用端子型番 ハ゛ラ状	電線サイズ゛ ⑥	絶縁被覆径	圧着高さ ⑥ 芯線部	圧着高さ 被覆部	取扱説明書番号	取付適用規格	重量
16-14	316040(REC) 917804(TAB)	‡16(1.23-2.00)	3.0-3.8	1.81-2.00	4.04REF	411-5712	114-5206	910
		‡14(2.00-2.27)		1.81-2.23				

THIS DRAWING IS A CONTROLLED DOCUMENT FOR TYCO ELECTRONICS CORPORATION. IT IS SUBJECT TO CHANGE AND THE CONTROLLING ENGINEERING ORGANIZATION SHOULD BE CONTACTED FOR THE LATEST REVISION.

DIMENSIONS: mm

TOLERANCES UNLESS OTHERWISE SPECIFIED:
0 PLC ±-
1 PLC ±-
2 PLC ±-
3 PLC ±-
4 PLC ±-
ANGLES ±-

MATERIAL

FINISH

DWN	J.KOGA	07-May-01
CHK	J.KOGA	07-May-01
APVD	S.YABE	07-May-01
PRODUCT SPEC	-	
APPLICATION SPEC	-	
WEIGHT	-	

AMP Tyco Electronics AMP K.K. Kawasaki, Japan

NAME HEAVY HEAD HAND TOOL (Dynamic D5-S Contact)

SIZE	CAGE CODE	DRAWING NO	RESTRICTED TO
A3	00779	C-234170-1	-

CUSTOMER DRAWING | SCALE - | SHEET 1 OF 1 | REV B

AMP 1470-19 REV 31MAR2000

Pro/ENGINEER DRAWING

Downloaded from Elcodis.com electronic components distributor