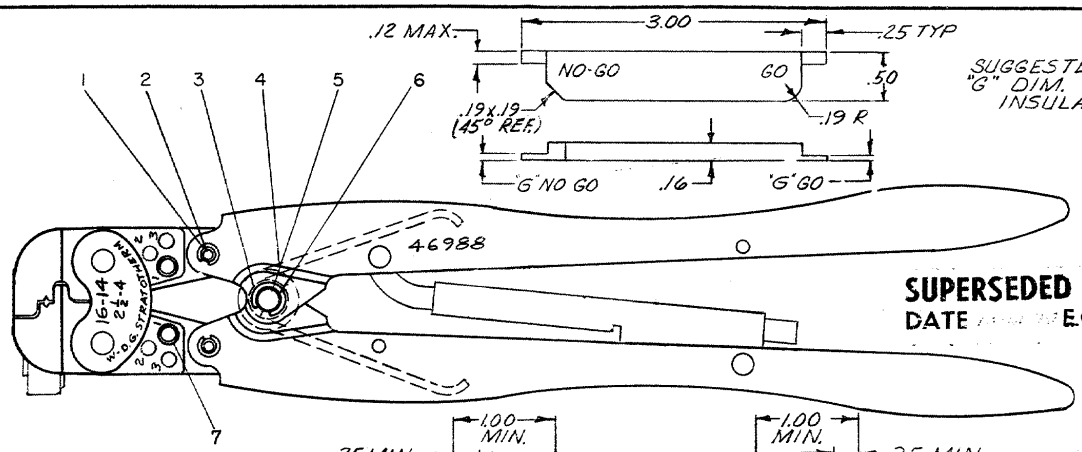

GAGE DIMENSIONS APPLY WHEN TOOL IS BOTTOMED BUT NOT UNDER PRESSURE.

FOR REPLACEMENT OF PARTS OTHER THAN LISTED, TOOL SHOULD BE RETURNED TO OUR FACTORY TO INSURE PROPER CERTI-CRIMP ADJUSTMENT.

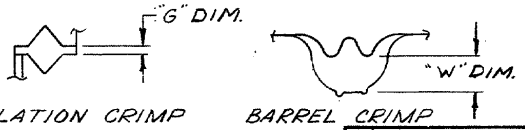

GAGE DIM.			
"G" AT POS. #1		"W" DIM.	
GO	NO GO	GO	NO GO
.045	.065	.067	.073

DWG SIZE		NUMBER	NAME	REMARKS	ITEM NO
2	A	39207	PIN-ADJUSTMENT		7
2	A	21045-6	RING-RETAINING		6
1	A	300449	PIN-RETAINING		5
1	A	39364	SPRING		4
1	A	39366	COLLAR		3
2	A	300432	PIN-RETAINING		2
4	A	21045-3	RING-RETAINING		1

LTR	REVISION RECORD	DR	CHK	DATE
G	SUPERSEDED BY I.S. 1535	-	DF	10-21-70
F	REVISED	B.S.	DF	4-3-67
E	REVISED	B.S.	J.F.	7-11-66
D	REVISED	C.M.	G.M.	12-2-63
C	REVISED	C.M.	G.M.	1-3-63
B	REVISED	R.M.	D.F.	6-14-62

NUMBER 46988

REQUIRED PER ASSEMBLY

DESCRIPTION

46988

©1959 BY AMP INCORPORATED. ALL RIGHTS RESERVED.
AMP PRODUCTS COVERED BY PATENTS AND/OR PATENTS PENDING.

CUSTOMER COPY REFERENCE ONLY

DR R. Yingney 4-24-62
CHK E. J. Frank 6-14-62
DE
APP E. J. Frank 6-14-62

MATERIAL AND FINISH —

AMP INCORPORATED HARRISBURG, PENNA.

CLASS HIGH TEMPERATURE & HEAT RESISTANT
TYPE "W" DIAMOND GRIP STRATOTHERM

WIRE-RANGE 16-14 | HARDNESS —
TOLERANCE EXCEPT AS NOTED ± .015 ± 1°
SCALE 1~1
LOC M B NO 46988 REV G

NAME HAND TOOL ASSEMBLY

PRINT NO. 5

Downloaded from Elcodis.com electronic components distributor