WIRE CRIMP				TERMINAL CRIMP HEIGHT
CRIMP SYMBOL	DIM	GO	NO GO	
14-12	F	.0724	.0774	SEE BELOW
	D	.0873	.0914	
10	F	.0984	.1034	SEE BELOW
	D	.1094	.1138	

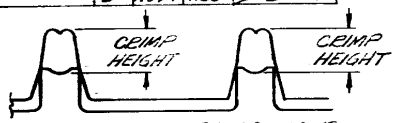

INSULATION CRIMP				TERMINAL CRIMP HEIGHT
CRIMP SYMBOL	DIM	GO	NO GO	
14-12	F	.1509	.1669	—
	D	.1690	.1850	—
10	F	.1509	.1669	—
	D	.1690	.1850	—

SEE NOTE #6

WIRE SIZE	TERMINAL CRIMP HEIGHT
14	.0925 / .0805
12	.0970 / .0850
10	.1140 / .1020

INACTIVE, REFER TO IS SHEET 7157 11/8/77

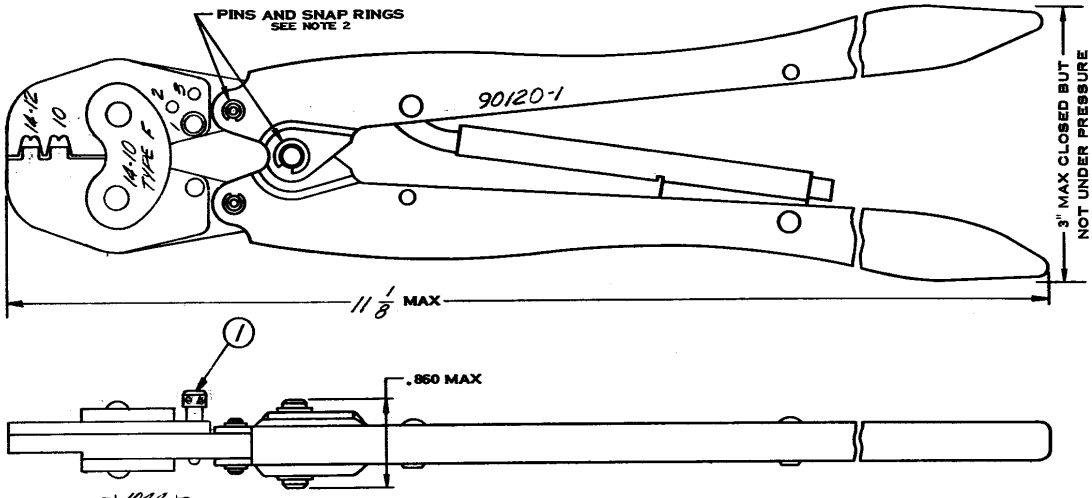

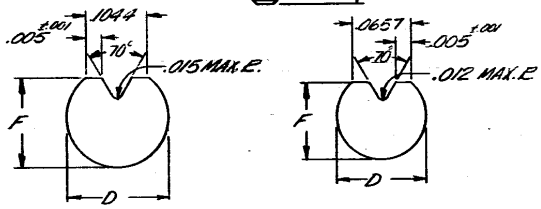

INSULATION CRIMPS
CRIMP SYMBOLS 14-12 & 10

WIRE CRIMPS
CRIMP SYMBOL 14-12 & 10

ENLARGED END VIEWS OF GAGES

INACTIVE 11/8/77 SEE I.S.-7157

1. CRIMP GAGE DIMENSIONS APPLY WHEN TOOL IS CLOSED OR BOTTOMED BUT NOT UNDER PRESSURE.
2. FOR REPLACEMENT OF PARTS SUCH AS PINS AND SNAP RINGS, ORDER REPAIR KIT NO. 125218-4.
3. FOR REPLACEMENT OF PARTS OTHER THAN PINS AND SNAP RINGS, TOOL IS TO BE RETURNED TO AMP INC., HARRISBURG, PENNA. TO INSURE PROPER CERTI-CRIMP ADJUSTMENT.
4. FOR TOOL USAGE, SEE INSTRUCTION SHEET NO. 7157.
5. HAND TOOL CAN BE CHECKED BY MEASURING TERMINAL CRIMP HEIGHT.
6. GAGE DIMENSIONS ARE MEASURED WITH INSULATION ADJUSTMENT PIN IN #1 POSITION.

SUGGESTED GAGE DESIGN

LTR	REVISION RECORD	DR	CHK	DATE
A	INACTIVE PER ECN #T-1119	SCI		11/8/77

NUMBER C-90120

NO. REQ'D	NUMBER	NAME	ITEM NO.
1	39207	PIN-ADJUSTMENT	1

©1964 BY AMP INCORPORATED. ALL RIGHTS RESERVED.
AMP PRODUCTS COVERED BY PATENTS AND/OR PATENTS PENDING.

CUSTOMER COPY REFERENCE ONLY

DR R.L. Cut 4/23/64
CHK S. Dinwiddie 4/30/64
DR E. Smith 4/30/64
APP [illegible] 4-30-64

MATERIAL-STEEL
FINISH-BLACK OXIDE
WEIGHT-/ LBS. 3 OZ.

WIRE - RANGE - INSULATION —H— — —H—
TOLERANCE EXCEPT AS NOTED —H—
SCALE —H—

AMP INCORPORATED HARRISBURG PENNA

CLASS —H—
TYPE —H—
LOC R B NO C-90120 REV A

NAME DOUBLE ACTION HAND TOOL

DIMENSIONS IN INCHES DO NOT SCALE PRINT

Downloaded from Elcodis.com electronic components distributor