Pomona ELECTRONICS

Technical Data Sheet

Models 72907
Mini SMD Grabber Test Clip with Lead and 2mm Jack

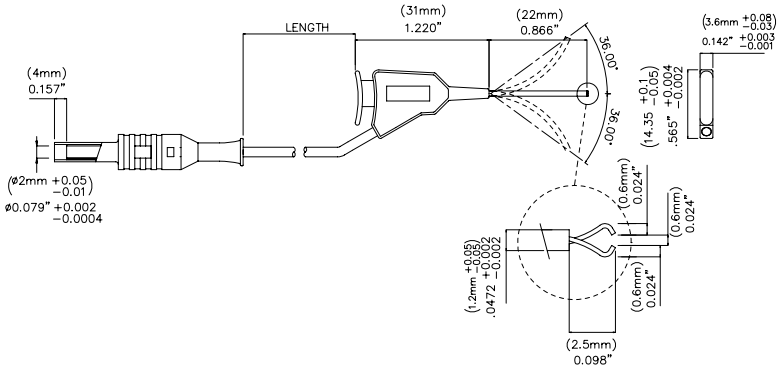

Test lead with Mini Smd Grabber Test Clip to 2mm Jack

Features

- Mini SMD Grabber Test Clip (Pomona 72906) with 20 inch (50cm) lead and 2mm Jack. (Black)

Materials

- Connector Body is Nickel plated Brass.
- Connector insulation is Polypropylene
- 0.8mm Socket is Gold over Nickel plated Brass.
- Insulation of 0.8mm is Elastomere
- Wire is Silicone.

Ordering Information

Model: 72907-20-Color
Available Colors: Black (-0), Red (-2)

Specifications

Max Current	Max. 1A
Max Voltage	33 V AC / 70 V DC
Temperature Rating	-20˚ C + 80˚ C
Max Resistance	Less than 8 mΩ

Rating: *hands free testing* in controlled environment: 70Vrms max. For CE compliance: Not intended for hand-held use at voltages above 33Vrms/70Vdc

USA: Sales: 800-490-2361 Technical Support: 800-241-2060 Fax: 888-403-3360
Europe: 31-(0) 40 2675 150 **International**: 425-446-5500
e-mail: technicalsupport@pomonatest.com
Where to Buy: www.pomonaelectronics.com

All dimensions are in inches. Tolerances (except noted): .xx = ±.02" (,51 mm), .xxx = ± .005" (,127 mm). All specifications are to the latest revisions. Specifications are subject to change without notice. Registered trademarks are the property of their respective companies.

Copyright © 2004 1/20/06

Downloaded from Elcodis.com electronic components distributor