THIS DRAWING IS UNPUBLISHED. RELEASED FOR PUBLICATION SEPT ,2006.

© COPYRIGHT 2006 BY TYCO ELECTRONICS CORPORATION. ALL RIGHTS RESERVED.

LOC	DIST
E	B

REVISIONS

P	LTR	DESCRIPTION	DATE	DWN	APVD
	A	REFER ECR-10-025883	17DEC10	PT	JC

TECHNICAL SPECIFICATION

DISSIPATION AT 25° C	25 WATTS MOUNTED ON STD HEATSINK
BS OHMIC RANGE	R01 TO 20K
STABILITY	ΔR <=1% per 1000hrs
ISOLATION VOLTAGE	2500V DC/AC pk
MAX WORKING VOLTAGE	550V DC/AC rms
TEMP COEFFICIENT	<100R ±50ppm/°C
	>100R ±30ppm/°C
CLIMATIC CATAGORY	55/200/56

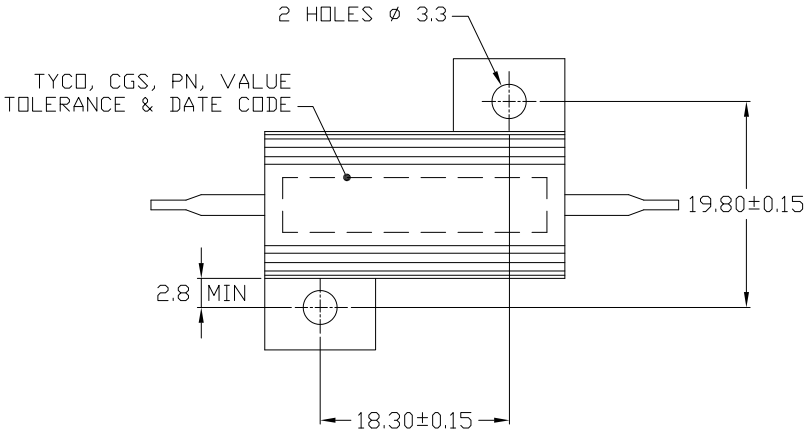

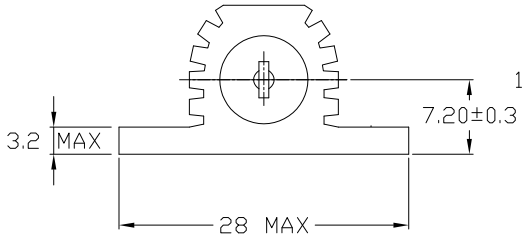

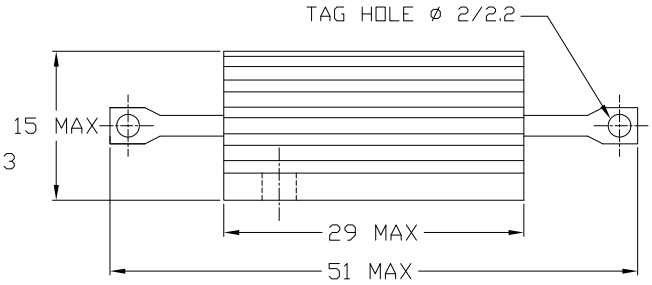

FOR A SPECIFIC PN FOR A RESISTANCE VALUE AND TOLERANCE, PLEASE REFER TO DMF.

RoHS Compliant

THIS DRAWING IS A CONTROLLED DOCUMENT.

DIMENSIONS: MM

TOLERANCES UNLESS OTHERWISE SPECIFIED:

0 PLC	± 0.5
1 PLC	± 0.2
2 PLC	± 0.1
3 PLC	± –
4 PLC	± –
ANGLES	± 5

MATERIAL –

FINISH –

DWN	R BLANCH	19SEPT06
CHK	J CATCHPOLE	19SEPT06
APVD	J CATCHPOLE	19SEPT06
PRODUCT SPEC	–	
APPLICATION SPEC	–	
WEIGHT	–	

Tyco Electronics

Tyco Electronics Corporation
Dorcan, Swindon, SN3 5HH

NAME THS25 METAL CLAD RESISTOR
–
–

SIZE	CAGE CODE	DRAWING NO	RESTRICTED TO
A3	00779	C-1879075	–

CUSTOMER DRAWING

SCALE	SHEET	OF	REV
NTS	1	1	A

AMP 1470-19 REV 31MAR2000

C:\STARTEC\

Downloaded from Elcodis.com electronic components distributor