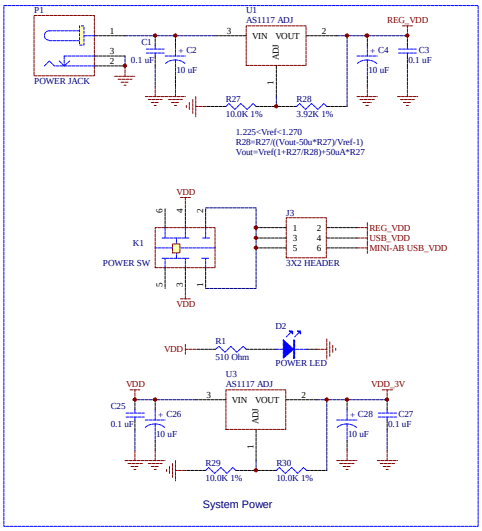

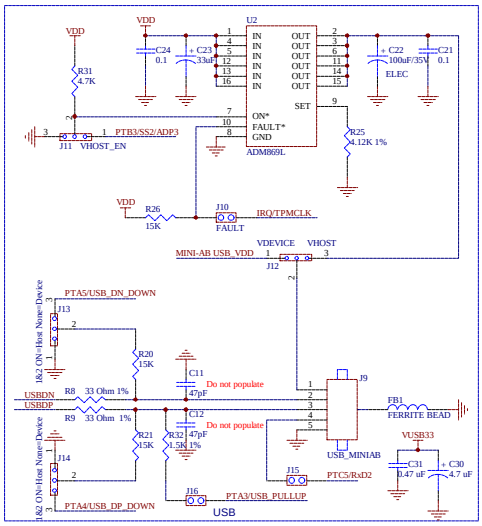

Copyright (C) 2007, P&E Microcomputer Systems, Inc.

P&E Microcomputer Systems, Inc.
98 Galen Street, Floor 2
Watertown
MA 02472
USA

DEMOJM Base Board Schematic Page 1

Size	FCSM No.	DWG No.	Rev
B			D

Scale | Sheet 1 of 3

Downloaded from Elcodis.com electronic components distributor

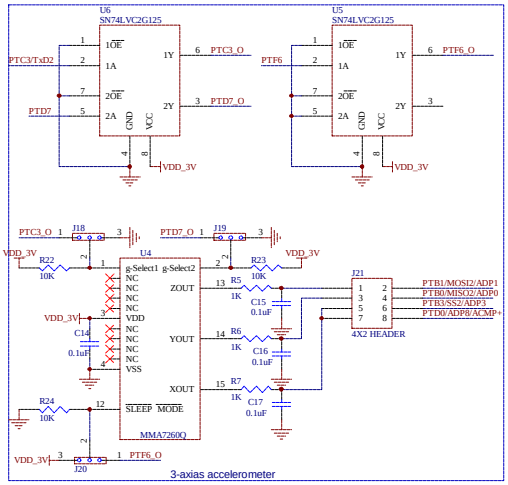

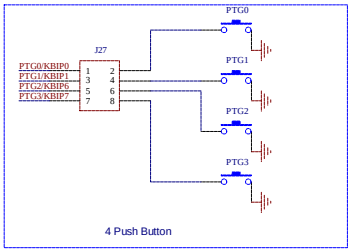

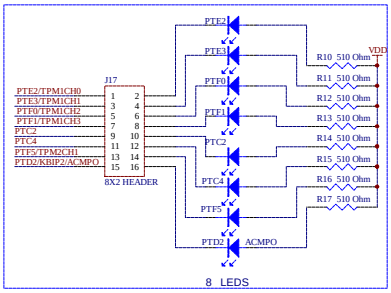

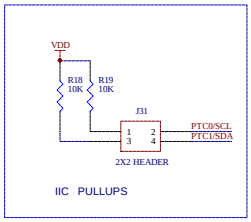

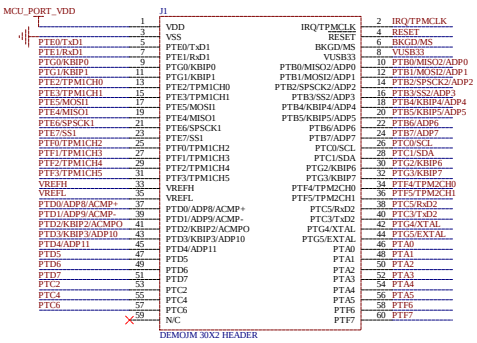

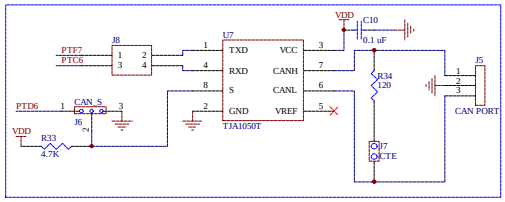

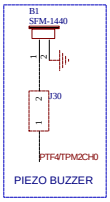

Copyright (C) 2007, P&E Microcomputer Systems, Inc.

P&E Microcomputer Systems, Inc.
98 Galen Street, Floor 2
Watertown
MA 02472
USA

DEMOJM Base Board Schematic Page 2

Size	FCSM No.	DWG No.	Rev
B			D

Scale		Sheet
		2 of 3

Downloaded from Elcodis.com electronic components distributor

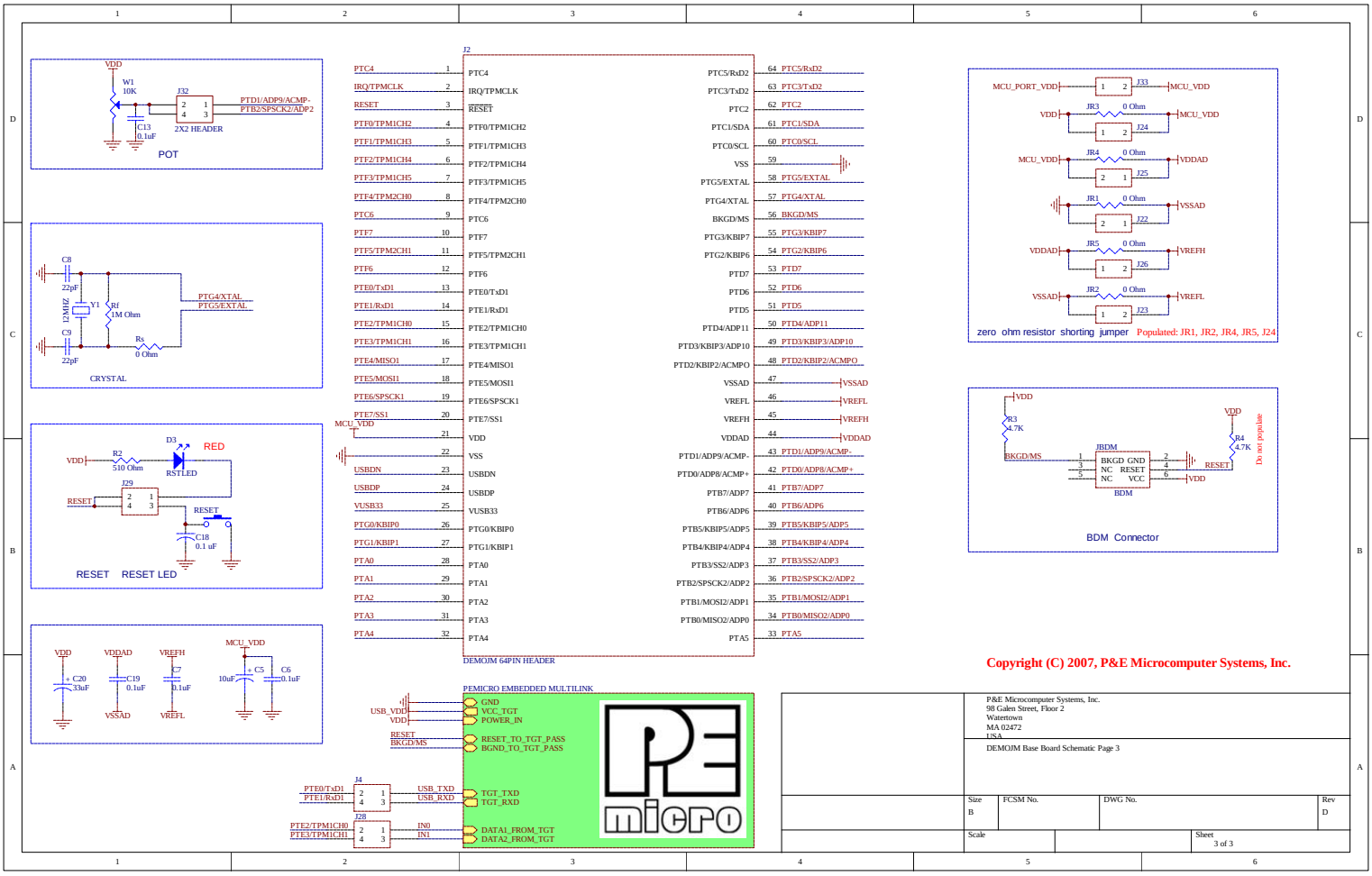

Downloaded from Elcodis.com electronic components distributor

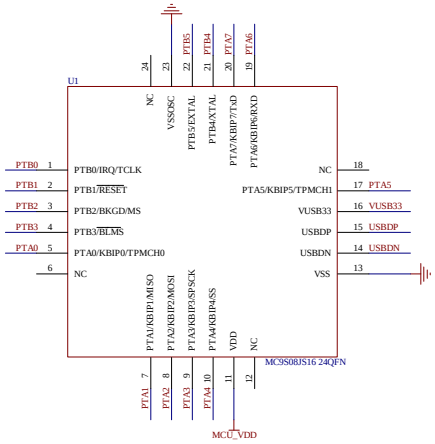

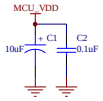

Note: In order to take full advantage of DEMOJM Base Board:
MC9S08JS16 Signals are mapped to DEMOJM 64Pin Header as follows:

TxD & RxD <==> TxD1 & RxD1
TPMCH0 & TPMCH1 <==> TPM1CH0 & TPM1CH1
SPI Signals <==> SPI1 Signals
BLMS <==> PTG0 Key
KBIP1/6/7 <==> PTG1/2/3 Key

P&E Microcomputer Systems, Inc.
98 Galen Street, Second Floor
Watertown, MA 02472
USA

DC9S08JS16 Schematic

Size	FCSM No.	DWG No.	Rev
B			A

Scale | Sheet 1 of 1

Downloaded from Elcodis.com electronic components distributor