Finisar

Product Specification

RoHS Compliant Long-Wavelength GBIC Transceiver

FTL-1319-3D

PRODUCT FEATURES

- Up to 1.25Gb/s bi-directional data links
- 1310nm Fabry-Perot laser transmitter
- RoHS Compliant and Lead Free
- Optional Digital Diagnostics
- Extended operating temperature range (-10°C to +85°C)
- Compatible with 3.3 & 5V systems
- Hot-pluggable (complies with GBIC specification Rev. 5.5)
- Fully metallic enclosure for low EMI
- Low power dissipation

APPLICATIONS

- 1.0625 Gb/s Fibre Channel
- 1.25 Gigabit Ethernet

Finisar's FTL-1319-3D 1310nm GBIC transceivers comply with GBIC Specification Revision 5.5[1]. They are compatible with Gigabit Ethernet as specified in IEEE 802.3[2], Fibre Channel FC-PH, PH2, PH3[3] and FC-PI-2 Rev. 10.0[4]. They are RoHS compliant and lead-free per Directive 2002/95/EC[5] and Finisar Appl. Note AN-2038.

PRODUCT SELECTION

Part Number	Digital Diagnostics
FTL-1319-3D	No
FTL-1319-3D-DD	Yes

Downloaded from Elcodis.com electronic components distributor

I. Pin Descriptions

Pin Name	Pin #	Sequence
RX_LOS	1	2
GND	2	2
GND	3	2
MOD_DEF(0)	4	2
MOD_DEF(1)	5	2
MOD_DEF(2)	6	2
TX_DISABLE	7	2
GND	8	2
GND	9	2
TX_FAULT (not supported)	10	2
GND	11	1
-RX_DAT	12	1
+RX_DAT	13	1
GND	14	1
V_{CC}	15	2
V_{CC}	16	2
GND	17	1
+TX_DAT	18	1
-TX_DAT	19	1
GND	20	1

Table 1. GBIC to host connector pin assignment

"Sequence" indicates the order in which pins make contact when the device is hot plugged. See "Table 3: Signal Definitions" in the GBIC Specification Revision 5.5.[1]

Downloaded from Elcodis.com electronic components distributor

II. Electrical Power Interface

Finisar FTL-1319-3D GBICs have an extended power supply voltage range of 3.15 V to 5.5 V as described in Table 2. They are compatible with both 3.3V and 5 V systems.

Parameter	Symbol	Min	Typ	Max	Units	Notes/Conditions
Supply Current	I_s		200	300	mA	
Inrush Current	I_{surge}			+30	mA	Hot plug, above steady state current.
Absolute Supply Voltage	V_{max}	-0.3		6	V	Not to be applied continuosly
Operating Supply Voltage	V_{cc}	3.15		5.5	V	Referenced to GND

Table 2. Electrical power interface

III. Low Speed Signals

RX_LOS and TX_DISABLE are TTL signals as described in Table 3. MOD_DEF(1) (SCL) and MOD_DEF(2) (SDA), are open drain CMOS signals (see section VIII, "Serial Communication Protocol"). Both MOD_DEF(1) and MOD_DEF(2) must be pulled up to host_Vcc. For more detailed information, see sections 5.3.1 – 5.3.8 in the GBIC Specification Rev. 5.5[1].

Parameter	Symbol	Min	Max	Units	Notes/Conditions
GBIC Output LOW	V_{OL}	0	0.5	V	4.7k to 10k pull-up to host_Vcc, measured at host side of connector
GBIC Output HIGH	V_{OH}	host_Vcc - 0.5	host_Vcc + 0.3	V	4.7k to 10k pull-up to host_Vcc, measured at host side of connector
GBIC Input LOW	V_{IL}	0	0.8	V	4.7k to 10k pull-up to Vcc, measured at GBIC side of connector
GBIC Input HIGH	V_{IH}	2	Vcc + 0.3	V	4.7k to 10k pull-up to Vcc, measured at GBIC side of connector

Table 3. Low speed signals – electronic characteristics

Downloaded from Elcodis.com electronic components distributor

Parameter	Symbol	Min	Typ	Max	Units	Notes/Conditions
RX_LOS Assert Level	--	-31			dBm	
RX_LOS Deassert Level	--			-20	dBm	
RX_LOS Hysteresis	--	0.5			dB	
RX_LOS Assert Delay	t_loss_on			100	µsec	From detection of loss of signal to assertion of RX_LOS
RX_LOS Negate Delay	t_loss_off			100	µsec	From detection of presence of signal to negation of RX_LOS
TX_DISABLE Assert Time	t_off			10	µsec	Rising edge of TX_DISABLE to fall of output signal below 10% of nominal
TX_DISABLE Negate Time	t_on			1000	µsec	Falling edge of TX_DISABLE to rise of output signal above 90% of nominal
TX_DISABLE Reset Time	t_reset	10			µsec	TX_DISABLE HIGH before TX_DISABLE set LOW

Table 4. Low speed signal parameters

IV. High Speed Electrical Interface

All high-speed PECL signals are AC-coupled internally.

Parameter	Symbol	Min	Typ	Max	Units	Notes/Conditions
Data Input Voltage	V_{in}	650		2000	mV	PECL differential peak - peak
Data Output Voltage	V_{out}	370		2000	mV	PECL differential peak - peak
PECL rise/fall	t_r,t_f			260	psec	20%-80% differential
Bit Error Rate	BER			10^{-12}		PRBS 2^7 - 1 test data pattern
Tx Input Impedance	Z_{in}		75		Ohm	
Rx Output Impedance	Z_{out}		75		Ohm	

Table 5. High-speed electrical interface

Downloaded from Elcodis.com electronic components distributor

V. Optical Parameters

Parameter	Symbol	Min	Typ	Max	Units	Notes/Conditions
TRANSMITTER CHARACTERISTICS						
Transmitter Center Wavelength	λ_c	1270	1310	1355	nm	
Transmitter Spectral Width	$\Delta\lambda_{RMS}$			4	nm	RMS. Also meets curves in FC-PI 10.0 Figures 18.
Transmitter Optical Output Power	P_{out}	-9	-6	-3	dBm	Average power coupled into single mode fiber
Transmitter Extinction Ratio	OMI	9			dB	
Transmitter Eye Opening	--	60			%	Conforms to IEEE 802.3 and Fibre Channel Eye Masks
Transmitter Rise/Fall Time	tr /tf			260	ps	20%-80% differential unfiltered
Total Transmitter Jitter				160	ps	Peak to peak, filtered
Relative Intensity Noise	RIN			-120	dB / Hz	
RECEIVER CHARACTERISTICS						
Optical Input Wavelength	λ_{in}	1270		1355	nm	
Receiver Reflectance	R_{RX}			-14	dB	
Optical Input Power (1.25GB/s)	P_{in}	-19		-3	dBm	BER < 10^{-12} w/ PRBS 2^7 - 1 test pattern
Optical Input Power (1.0625Gb/s)	P_{in}	-20		-3	dBm	
Total Receiver Jitter				160	ps	Peak to peak, filtered in loopback

Note: Parameters are specified over temperature and voltage, at end of life unless otherwise noted.

Table 6. Optical parameters

VI. General Specifications

Parameter	Symbol	Min	Typ	Max	Units	Notes/Conditions
Data Rate	BR		1.25 1.0625		Gb/sec	Fibre Channel, IEEE 802.3 Compatible
Fiber Length	L			10,000	m	9µm Core Single Mode Fiber
Fiber Length	L			550	m	50µm 500MHz-km Fiber
Fiber Length	L			275	m	62.5µm 200MHz-km Fiber

Table 7. General specifications

Downloaded from Elcodis.com electronic components distributor

VII. Environmental Specifications

Note that the GBIC Specification requires an ambient temperature range of 0 to 50°C. The FTL-1319-3D has an extended range from –10°C to +85°C case temperature as specified in Table 8.

Parameter	Symbol	Min	Typ	Max	Units	Notes/Conditions
Operating Temp	T_{op}	-10		85	°C	Case Temperature
Relative Humidity	RH	0		85	%	Non Condensing
Storage Temp	T_{sto}	-40		85	°C	
Eye Safety	--					CDRH and IEC-825 Class 1 Laser Product. See Note 1

Note 1: Complies with FDA performance standards for laser products except for deviations pursuant to Laser Notice No. 50, dated July 26, 2001.

Table 8. Environmental specifications

VIII. Serial Communication Protocol

All Finisar optical GBICs implement serial identification features described for 'Module Definition "4"' as outlined in Annex D of the GBIC Specification[1]. These GBICs use an Atmel AT24C01A 128 byte E^2PROM at address A0H. For details on interfacing with the E^2PROM, see the Atmel data sheet titled "AT24C01A/02/04/08/16 2-Wire Serial CMOS E^2PROM."[6]

The FTL-1319-3D-DD also supports extended diagnostic features as described in Finisar Applications Note AN-2030, "Digital Diagnostic Monitoring Interface for Optical Transceivers"[8], and additional information is available in SFF standard titled: "Digital Diagnostic Monitoring Interface for Optical Transceivers"[7] (SFF-8472 rev9.3). A controller IC that monitors system parameters such as laser current, module temperature, transmitter power, and received power is accessible at address A2H.

I2C clock speed, digital diagnostic accuracy and digital diagnostic range can be found in the table below. Values in the table represent the worst-case values over temperature, voltage, and life.

Downloaded from Elcodis.com electronic components distributor

Parameter	Symbol	Min	Typ	Max	Units	Notes/Conditions
I^2C Clock Speed		0		100,000	Hz	Bus can be driven blind
Accuracy						
Internal Transceiver Temperature	$DD_{Temperature}$	-3		+3	°C	Measured at controller IC
Internal Transceiver Supply Voltage	$DD_{Voltage}$	-3		+3	%	Measured at controller IC
Tx Bias Current	DD_{Bias}	-10		+10	%	
Tx Output Power	$DD_{TxPower}$	-3		+3	dB	100% tested in production tested at room temp to ±2 dB
Received Average Power	$DD_{RxPower}$	-3		+3	dB	100% tested in production tested at room temp to ±2 dB
Range						
Internal Transceiver Temperature	$DD_{Temperature}$	-40		100	°C	
Internal Transceiver Supply Voltage	$DD_{Voltage}$	3.0		6.0	V	
Tx Bias Current	DD_{Bias}	0		80	mA	
Tx Output Power	$DD_{TxPower}$	-13.5		1	dBm	
Received Average Power	$DD_{RxPower}$	-24		1	dBm	

Table 9. Digital Diagnostic Accuracy and Range Limits

Downloaded from Elcodis.com electronic components distributor

IX. Mechanical Specifications

Finisar GBICs are compatible with the mechanical specifications outlined in the GBIC Specification Revision 5.5, Section 6[1].

Insertion, Extraction, and Retention Forces						
Parameter	**Symbol**	**Min**	**Typ**	**Max**	**Units**	**Notes/Conditions**
GBIC insertion	F_I	0		20	Newtons	~4.5 lbs
GBIC extraction	F_E	0		15	Newtons	~3.3 lbs
GBIC retention	F_R	130		N/A	Newtons	Straight out ~29.3 lbs

Table 10. Insertion, extraction, and retention forces

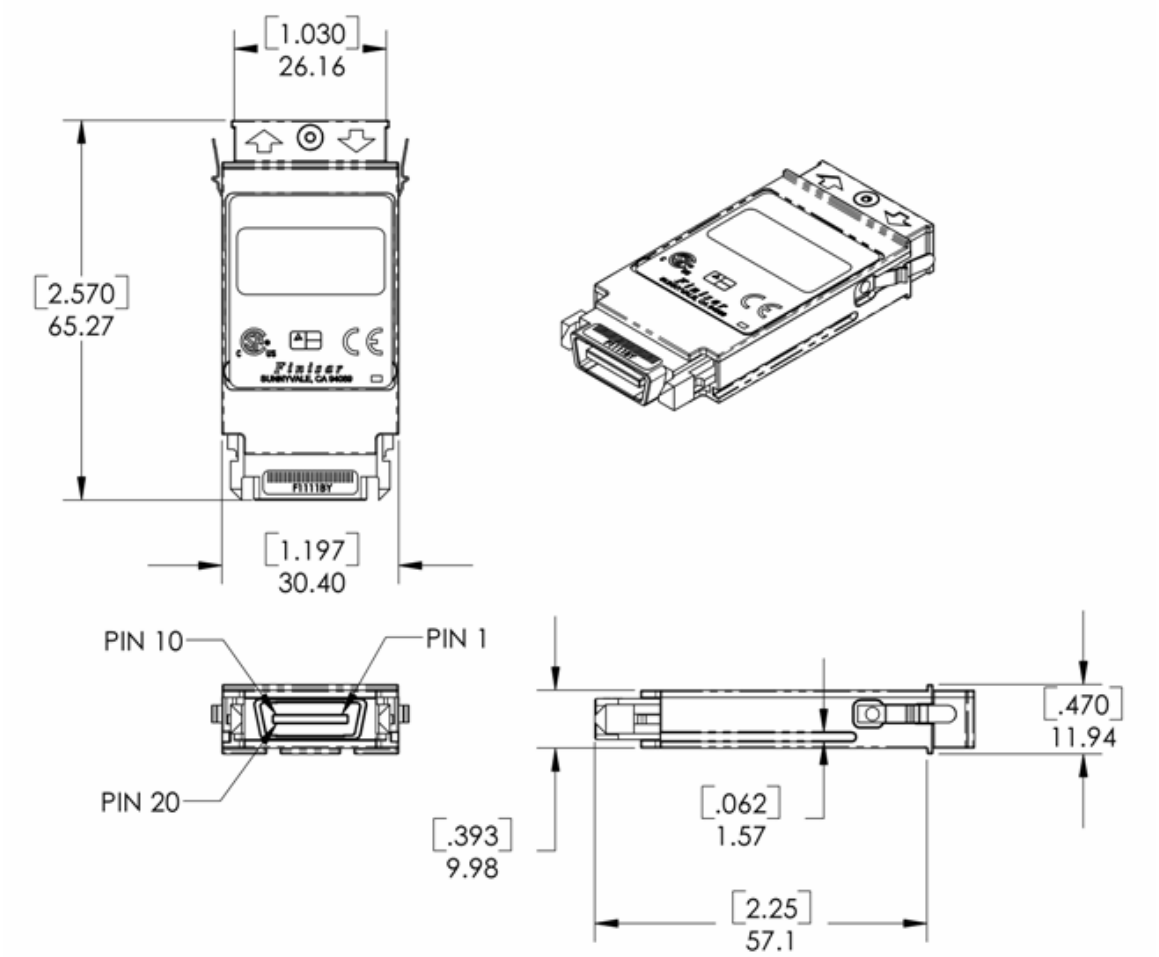

Figure 1. GBIC outline drawing

Downloaded from Elcodis.com electronic components distributor

X. References

1. "Gigabit Interface Converter (GBIC) Revision 5.5". Sun Microsystems Computer Company et. al., August 16, 1999. http://playground.sun.com/pub/OEmod/

2. IEEE Std 802.3. IEEE Standards Department, 2002.

3. "Fibre Channel Physical and Signaling Interface (FC-PH, FC-PH2, FC-PH3)". American National Standard for Information Systems.

4. "Fibre Channel Draft Physical Interface Specification (FC-PI-2 Rev. 10.0). American National Standard for Information Systems.

5. Directive 2002/95/EC of the European Council Parliament and of the Council, "on the restriction of the use of certain hazardous substances in electrical and electronic equipment." January 27, 2003.

6. "AT24C01A/02/04/08/16 2-Wire Serial CMOS E^2PROM". Atmel Corporation. www.Atmel.com

XI. For More Information

Finisar Corporation
1389 Moffett Park Drive
Sunnyvale, CA 94089-1134
Tel. 1-408-548-1000
Fax 1-408-541-6138
sales@finisar.com
www.finisar.com

Downloaded from Elcodis.com electronic components distributor