Optocoupler, Phototriac Output, 400 V_{DRM}

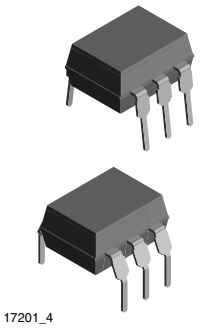

17201_4

Note: pin 5 must not be connected

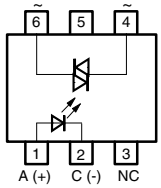

17221-2

FEATURES

- 400 V blocking voltage
- Isolation test voltage, 5300 V_{RMS}, t = 1 s
- Isolation materials per UL94
- Compliant to RoHS directive to 2002/95/EC and in accordance WEEE 2002/96/EC

Pb-free

e3

RoHS COMPLIANT

APPLICATIONS

- High current triac driver
- Solid state relay
- Switch small AC loads

DESCRIPTION

The K3020P, 3020PG series consists of a phototriac optically coupled to a gallium arsenide infrared-emitting diode in a 6-lead plastic dual inline package

AGENCY APPROVALS

- UL1577, file no. E52744 system code H
- CSA notice 5A compliant, cUL tested
- DIN EN 60747-5-5 (VDE0884)
- BSI IEC 60950; IEC 60065 pending

ORDERING INFORMATION

K	3	0	2	0	P	#	X	0	#	#	T
PART NUMBER						TRIGGER CURRENT BIN	PACKAGE OPTION				TAPE AND REEL

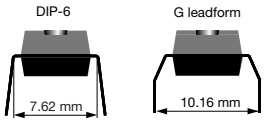

AGENCY CERTIFIED/PACKAGE	TRIGGER CURRENT, I_{FT}				
VDE, cUL, BSI	3.6 mA	5 mA	10 mA	15 mA	30 mA
DIP-6	K3036P	K3023P	K3022P	K3021P	K3020P
DIP-6, 400 mil	K3036PG	K3023PG	K3022PG	K3021PG	K3020PG

Note

- G = leadform 10.16 mm; G is not marked on the body.

ABSOLUTE MAXIMUM RATINGS (1) (T_{amb} = 25 °C, unless otherwise specified)

PARAMETER	TEST CONDITION	PART	SYMBOL	VALUE	UNIT
INPUT					
Reverse voltage			V_R	5	V
Forward current			I_F	80	mA
Surge current	P.W. < 10 µs		I_{FSM}	3	A
Power dissipation			P_{diss}	100	mW
Junction temperature			T_j	100	°C
OUTPUT					
Peak off-state voltage			V_{DRM}	400	V
On-state RMS current			$I_{D(RMS)}$	100	mA
Peak surge current	$t_p \leq 10$ ms		I_{FSM}	1.5	A
Power dissipation			P_{diss}	300	mW
Junction temperature			T_j	100	°C

ABSOLUTE MAXIMUM RATINGS [1] (T_{amb} = 25 °C, unless otherwise specified)					
PARAMETER	**TEST CONDITION**	**PART**	**SYMBOL**	**VALUE**	**UNIT**
COUPLER					
Isolation voltage	t = 1 s		V_{ISO}	5300	V_{RMS}
Creepage distance				≥ 7	mm
Clearance distance				≥ 7	mm
Isolation resistance	V_{IO} = 500 V, T_{amb} = 25 °C		R_{IO}	$\geq 10^{12}$	Ω
	V_{IO} = 500 V, T_{amb} = 100 °C		R_{IO}	$\geq 10^{11}$	Ω
Total power dissipation			P_{tot}	350	mW
Storage temperature range			T_{stg}	- 55 to + 100	°C
Ambient temperature			T_{amb}	- 40 to + 85	°C
Junction temperature			T_j	100	°C
Lead soldering temperature [2]	2 mm from case, t < 10 s		T_{sld}	260	°C

Notes

(1) Stresses in excess of the absolute maximum ratings can cause permanent damage to the device. Functional operation of the device is not implied at these or any other conditions in excess of those given in the operational sections of this document. Exposure to absolute maximum ratings for extended periods of the time can adversely affect reliability.

(2) Refer to reflow profile for soldering conditions for surface mounted devices (SMD). Refer to wave profile for soldering conditions for through hole devices (DIP).

ELECTRICAL CHARACTERISTICS [1] (T_{amb} = 25 °C, unless otherwise specified)							
PARAMETER	**TEST CONDITION**	**PART**	**SYMBOL**	**MIN.**	**TYP.**	**MAX.**	**UNIT**
INPUT							
Forward voltage	I_F = 50 mA		V_F		1.3	1.6	V
Reverse voltage	I_R = 10 µA		V_R	5			V
Junction capacitance	V_R = 0 V, f = 1 MHz		C_j		50		pF
OUTPUT							
Forward peak off-state voltage (repetitive)	I_{DRM} = 100 nA		V_{DRM} [2]	400			V
Peak on-state voltage	I_{TM} = 100 mA		V_{TM}		1.5	3	V
Critical rate of rise of off-state voltage	I_F = 0 A, V_D = 0.67 V_{DRM}		dV/dt_{cr}		10		V/µs
Critical rate of rise of on-state current commutation	V_D = 30 V_{RMS}, I_D = 15 mA_{RMS}		dV/dt_{crq}	0.1	0.15		V/µs
COUPLER [3]							
Emitting diode trigger current	V_S = 3 V, R_L = 150 Ω	K3020P	I_{FT}		15	30	mA
		K3020PG	I_{FT}		15	30	mA
		K3021P	I_{FT}		8	15	mA
		K3021PG	I_{FT}		8	15	mA
		K3022P	I_{FT}		5	10	mA
		K3022PG	I_{FT}		5	10	mA
		K3023P	I_{FT}		3	5	mA
		K3023PG	I_{FT}		3	5	mA
		K3036P	I_{FT}		2	3.6	mA
		K3036PG	I_{FT}		2	3.6	mA
Holding current	I_F = 10 mA, $V_S \geq$ 3 V		I_H		200		µA

Notes

(1) Minimum and maximum values are testing requirements. Typical values are characteristics of the device and are the result of engineering evaluation. Typical values are for information only and are not part of the testing requirements.

(2) Test voltage must be applied within dV/dt ratings.

(3) I_{FT} is defined as a minimum trigger current.

MAXIMUM SAFETY RATINGS (1)						
PARAMETER	TEST CONDITION	SYMBOL	MIN.	TYP.	MAX.	UNIT
INPUT (2)						
Forward current		I_F			130	mA
OUTPUT						
Power dissipation		P_{diss}			300	mW

Notes

(1) According to DIN EN 60747-5-5 (see figure 1). This optocoupler is suitable for safe electrical isolation only within the safety ratings. Compliance with the safety ratings shall be ensured by means of suitable protective circuits.

(2) The device is used for protective separation agains electrical shock within the maximum safety ratings. This must be ensured by protective circuits in the applications.

SAFETY AND INSULATION RATINGS						
PARAMETER	TEST CONDITION	SYMBOL	MIN.	TYP.	MAX.	UNIT
Climatic classification (according to IEC 68 part 1)				55/100/21		
Pollution degree	DIN VDE0109			2		
Comparative tracking index		CTI	175			
V_{IOTM}			8000			V_{peak}
V_{IORM}			890			V_{peak}
Insulation resistance at 25 °C	V_{IO} = 500 V	R_{IS}			$\geq 10^{12}$	Ω
Insulation resistance at T_S	V_{IO} = 500 V	R_{IS}			$\geq 10^{9}$	Ω
Insulation resistance at 100 °C	V_{IO} = 500 V	R_{IS}			$\geq 10^{11}$	Ω
Partial discharge test voltage	Method a, $V_{pd} = V_{IORM}$ x 1.875	V_{pd}			1669	V_{peak}
P_{SO}					500	mW
I_{SI}					250	mA
T_{SI}					175	°C
Clearance distance	Standard DIP-6		7			mm
Creepage distance	Standard DIP-6		7			mm
Clearance distance	400 mil DIP-6		8			mm
Creepage distance	400 mil DIP-6		8			mm

Note

As per IEC60747-5-5, § 7.4.3.8.1, this optocoupler is suitable for “safe electrical insulation” only within the safety ratings. Compliance with the safety ratings shall be ensured by means of prodective circuits.

PACKAGE DIMENSIONS millimeters

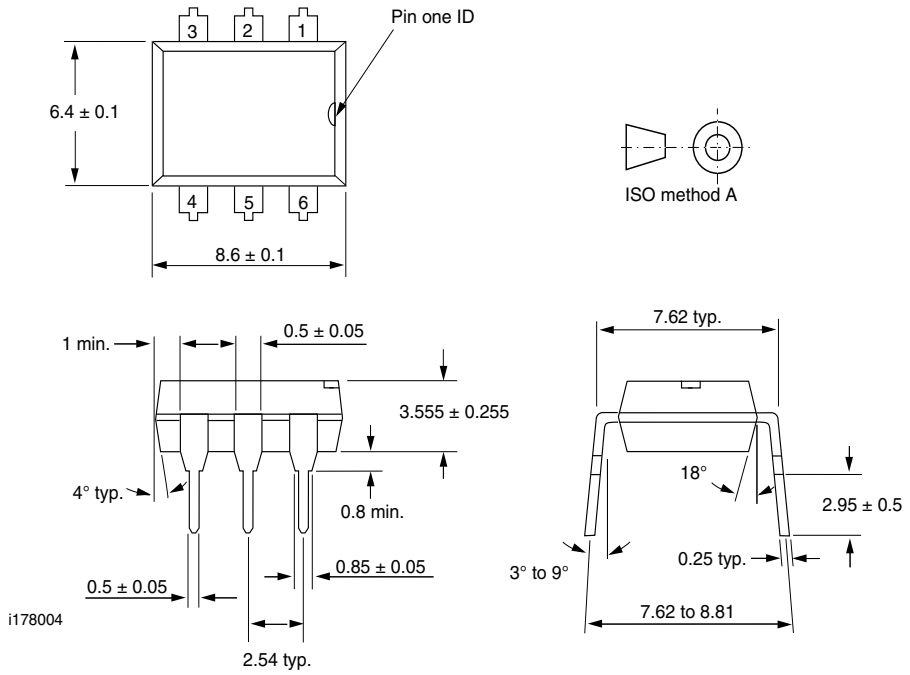

K3020PG type

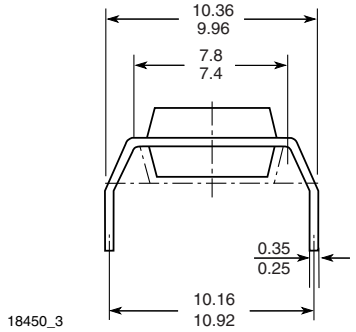

PACKAGE MARKING

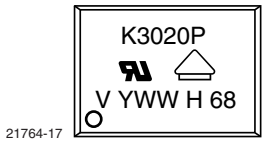

Disclaimer

ALL PRODUCT, PRODUCT SPECIFICATIONS AND DATA ARE SUBJECT TO CHANGE WITHOUT NOTICE TO IMPROVE RELIABILITY, FUNCTION OR DESIGN OR OTHERWISE.

Vishay Intertechnology, Inc., its affiliates, agents, and employees, and all persons acting on its or their behalf (collectively, "Vishay"), disclaim any and all liability for any errors, inaccuracies or incompleteness contained in any datasheet or in any other disclosure relating to any product.

Vishay makes no warranty, representation or guarantee regarding the suitability of the products for any particular purpose or the continuing production of any product. To the maximum extent permitted by applicable law, Vishay disclaims (i) any and all liability arising out of the application or use of any product, (ii) any and all liability, including without limitation special, consequential or incidental damages, and (iii) any and all implied warranties, including warranties of fitness for particular purpose, non-infringement and merchantability.

Statements regarding the suitability of products for certain types of applications are based on Vishay's knowledge of typical requirements that are often placed on Vishay products in generic applications. Such statements are not binding statements about the suitability of products for a particular application. It is the customer's responsibility to validate that a particular product with the properties described in the product specification is suitable for use in a particular application. Parameters provided in datasheets and/or specifications may vary in different applications and performance may vary over time. All operating parameters, including typical parameters, must be validated for each customer application by the customer's technical experts. Product specifications do not expand or otherwise modify Vishay's terms and conditions of purchase, including but not limited to the warranty expressed therein.

Except as expressly indicated in writing, Vishay products are not designed for use in medical, life-saving, or life-sustaining applications or for any other application in which the failure of the Vishay product could result in personal injury or death. Customers using or selling Vishay products not expressly indicated for use in such applications do so at their own risk and agree to fully indemnify and hold Vishay and its distributors harmless from and against any and all claims, liabilities, expenses and damages arising or resulting in connection with such use or sale, including attorneys fees, even if such claim alleges that Vishay or its distributor was negligent regarding the design or manufacture of the part. Please contact authorized Vishay personnel to obtain written terms and conditions regarding products designed for such applications.

No license, express or implied, by estoppel or otherwise, to any intellectual property rights is granted by this document or by any conduct of Vishay. Product names and markings noted herein may be trademarks of their respective owners.