THIS DRAWING IS UNPUBLISHED. RELEASED FOR PUBLICATION
© COPYRIGHT - BY TYCO ELECTRONICS CORPORATION. ALL INTERNATIONAL RIGHTS RESERVED.

LOC	DIST	REVISIONS				
GP	00	P	LTR	DESCRIPTION	DATE	DWN	APVD
			B	REVISED PER ECO-10-019804	28OCT10	HMR	JL

1. RECOMMENDATIONS FOR 2.36 [.093] MIN THICK PC BOARD:
   A. HOLE DIAMETER AFTER DRILLING = 1.15±0.03[.045±.001].
   B. HOLE DIAMETER AFTER TIN PLATING = 0.94[.037]–1.09[.043].
   C. HOLE DIAMETER AFTER REFLOW = 0.91[.036]–1.09[.043].
   D. PC BOARD PLATING TO BE 0.76µm [.000300] MIN TIN–LEAD 0.05±0.03[.002±.001] COPPER.
2. HOUSING: NYLON OR POLYESTER, UL 94V–0 RATED, BLACK.
3. CONTACTS: COPPER ALLOY.
4. SHELL: CARBON STEEL.
5. SCREWLOCKS: ZINC.
6. SHIELD:1.27µm [.000050] MIN TIN OVER 0.13µm [.000005] MIN NICKEL STRIKE.
7. SHELL:5.08µm [.000200] MIN TIN OVER 2.54µm [.000100] MIN COPPER.
8. CONTACTS:
   0.76 MICRO METERS [.000030] MINIMUM GOLD IN MATING AREA.
   2.54 MICRO METERS [.000100] MINIMUM TIN ON COMPLIANT PIN.
   ALL OVER 1.27 MICRO METERS [.000050] MINIMUM NICKEL.
   OR
   GOLD FLASH OVER PALLADIUM NICKEL.
   0.76 MICRO METERS [.000030] MINIMUM TOTAL IN MATING AREA.
   2.54 MICRO METERS [.000100] MINIMUM TIN ON COMPLIANT PIN.
   ALL OVER 1.27 MICRO METERS [.000050] MINIMUM NICKEL.
9. SHIELD: STAINLESS STEEL
10. DATUMS AND BASIC DIMENSIONS ESTABLISHED BY CUSTOMERS.
11. SCREWLOCKS: CLEAR CHROMATE

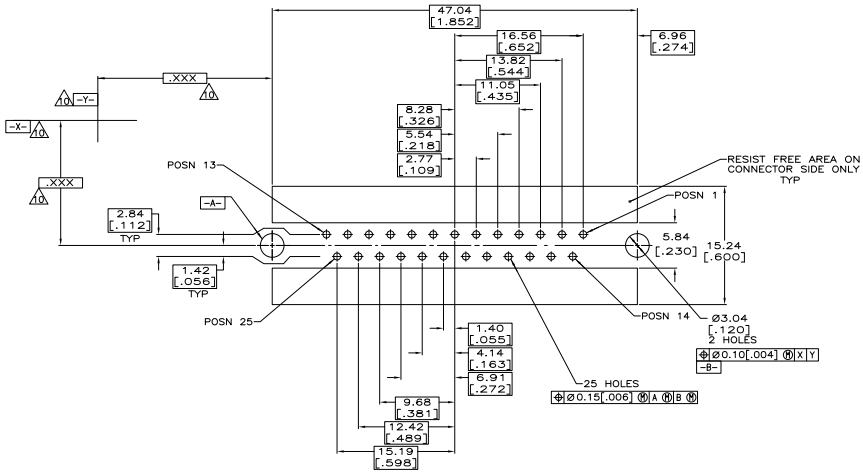

RECOMMENDED PC BOARD MOUNTING DIMENSIONS 1
CONNECTOR SIDE OF BOARD

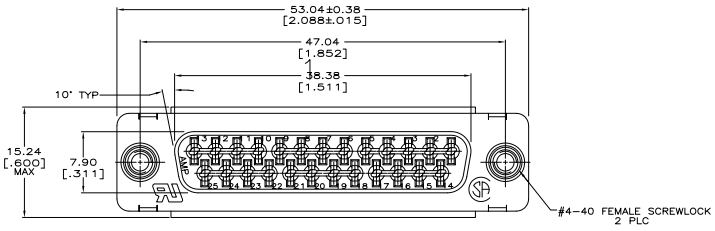

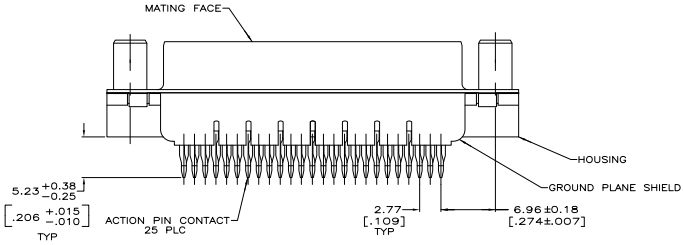

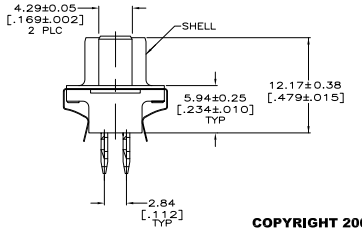

COPYRIGHT 2005
TYCO ELECTRONICS CORP
ALL RIGHTS RESERVED

THIS DRAWING IS A CONTROLLED DOCUMENT.

DIMENSIONS: INCHES
TOLERANCES UNLESS OTHERWISE SPECIFIED:
0 PLC ± –
1 PLC ± –
2 PLC ± 0.13 [.005]
3 PLC ± –
4 PLC ± –
ANGLES ± 2°
MATERIAL 2 3 4 5 6
FINISH 6 7 8 9

DWN A. FERNANDEZ–DOCK5 04-04-05
CHK S. BOLASH 04-04-05
APVD M. WALMSLEY 04-04-05
PRODUCT SPEC 108–40014
APPLICATION SPEC 114–40026
WEIGHT –
CUSTOMER DRAWING

Tyco Electronics
Tyco Electronics Corporation
Harrisburg, PA 17105–3608

NAME: RECEPTACLE ASSEMBLY, SIZE 3, 25 POSITION, ACTION PIN, FRONT METAL SHELL AMPLIMITE HD–20

SIZE	CAGE CODE	DRAWING NO	RESTRICTED TO
A1	00779	C=5748441	–

SCALE 4:1 SHEET 1 OF 1 REV B

Downloaded from Elcodis.com electronic components distributor