THIS DRAWING IS UNPUBLISHED. RELEASED FOR PUBLICATION
© COPYRIGHT – BY TYCO ELECTRONICS CORPORATION. ALL RIGHTS RESERVED.

LOC	DIST	REVISIONS				
GP	00	P	LTR	DESCRIPTION	DATE	DWN	APVD
			A	REVISED PER ECO-06-029339	3/JAN/07	ZMR	EDB

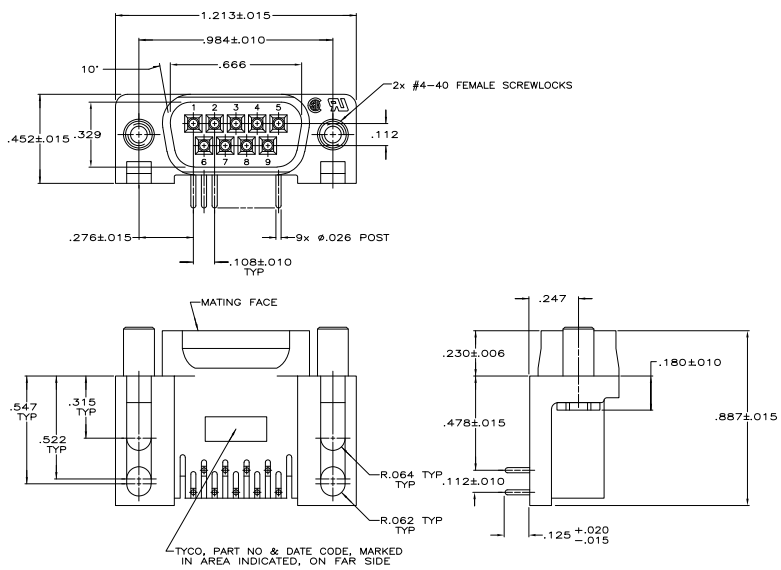

1. HOUSING: FLAME RETARDANT, 94V-0 RATED, GLASS FILLED NYLON OR POLYESTER, COLOR: BLACK
CONTACTS: BRASS
SCREWLOCKS: ZINC.

2. REFER TO APPLICATION SPEC FOR RECOMMENDED P.C. BOARD MOUNTING DIMENSIONS FOR AUTOMATIC INSERTION.

3. SCREWLOCKS: CLEAR CHROMATE COATING.
CONTACTS: PLATED WITH .000030 MIN GOLD FOR A LENGTH OF .150 MIN FROM MATING END, .000100 MIN TIN ON SOLDER END, ALL OVER .000050 MIN NICKEL ON ENTIRE CONTACT.
–OR–
PLATED WITH GOLD FLASH OVER .000030 MIN PALLADIUM NICKEL FOR A LENGTH OF .150 MIN FROM MATING END, .000100 MIN TIN ON SOLDER END, BOTH OVER .000050 MIN NICKEL ON ENTIRE CONTACT.

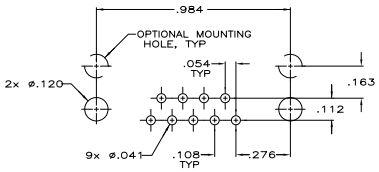

P.C. BOARD MOUNTING DIMENSIONS 2

COPYRIGHT 2005
TYCO ELECTRONICS CORP
ALL RIGHTS RESERVED

5745878-2
PART NUMBER

THIS DRAWING IS A CONTROLLED DOCUMENT.

DIMENSIONS: INCHES
TOLERANCES UNLESS OTHERWISE SPECIFIED:
0 PLC ± –
1 PLC ± –
2 PLC ± –
3 PLC ± .005
4 PLC ± –
ANGLES ± 2°
MATERIAL 1
FINISH 3

DWN G.PETERS 16SEP05
CKD S.BOLASH 16SEP05
APVD M.WALMSLEY 16SEP05
PRODUCT SPEC 108-40025
APPLICATION SPEC 114-40015
WEIGHT –
CUSTOMER DRAWING

Tyco Electronics
Tyco Electronics Corporation
Harrisburg, PA 17105-3608

NAME PLUG ASSY, SIZE 1, 9 POSN, RIGHT ANGLE, .478 SERIES, .026 DIA POSTS, W/ FEMALE SCREWLOCKS, AMPLIMITE HD-20

SIZE A1 | CAGE CODE 00779 | DRAWING NO C-5745878 | RESTRICTED TO –
SCALE 4:1 | SHEET 1 OF 1 | REV A

AMP 4805 REV 31MAR2000

Downloaded from Elcodis.com electronic components distributor