THIS DRAWING IS UNPUBLISHED. RELEASED FOR PUBLICATION
© COPYRIGHT - BY TYCO ELECTRONICS CORPORATION. ALL RIGHTS RESERVED.

LOC	DIST	REVISIONS				
GP	00	P	LTR	DESCRIPTION	DATE	DWN	APVD
			G	REVISED PER ECO-09-024765	14JAN2010	CR	SB

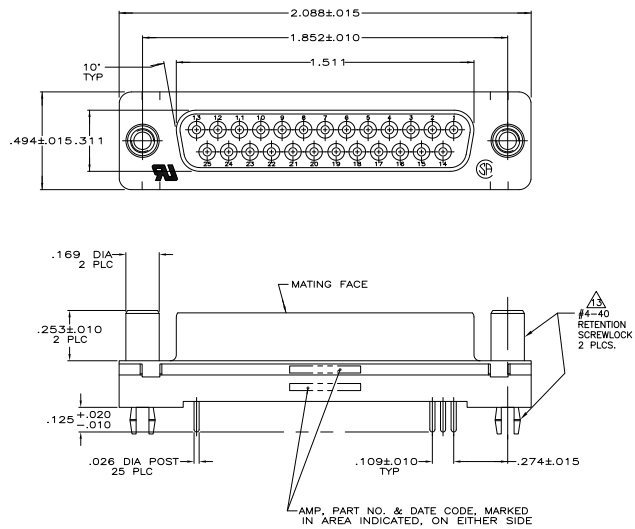

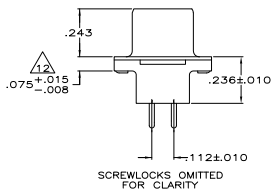

1. NOTE DELETED.
2. HOUSING: FLAME RETARDANT 94V-0 RATED, GLASS FILLED, NYLON OR POLYESTER, COLOR: BLACK.
3. SHELL: CARBON STEEL.
4. CONTACT: PHOS. BRONZE.
5. RETENTION SCREWLOCK: BRASS.
6. NOTE DELETED.
7. SHELL: .000200 MIN TIN OVER .000100 MIN COPPER.
8. RETENTION SCREWLOCK: .000100 MIN TIN-LEAD OVER .000050 MIN NICKEL OVER COPPER FLASH.
9. CONTACT: PLATED WITH .000030 GOLD FOR LENGTH OF .100 MIN FROM MATING END, WITH POINT OF MEASUREMENT .050 FROM MATING END OF CONTACT, .000100-.000200 TIN OR TIN LEAD ON SOLDER END, ALL OVER .000050 NICKEL ON ENTIRE CONTACT.
10. NOTE DELETED.
11. DATUMS AND BASIC DIMENSIONS ESTABLISHED BY CUSTOMER.
12. .110 MAX IN SHELL TAB CLINCH AREAS.
13. ORIENTATION IS OPTIONAL AND MAY NOT BE AS SHOWN.

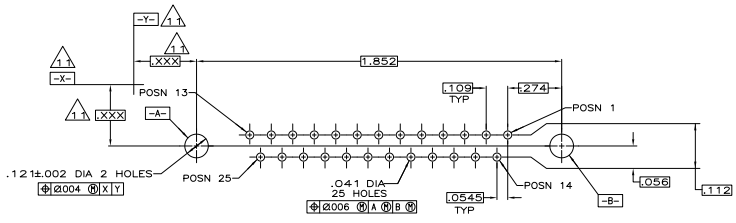

PC BOARD MOUNTING DIMENSIONS
CONNECTOR SIDE OF BOARD
.062 PC BOARD THICKNESS

748612-1
PART NUMBER

THIS DRAWING IS A CONTROLLED DOCUMENT.

DIMENSIONS: INCHES
TOLERANCES UNLESS OTHERWISE SPECIFIED: 0 PLC ± - 1 PLC ± - 2 PLC ± - 3 PLC ± .005 4 PLC ± - ANGLES ± -
MATERIAL 2 3 4 5
FINISH 7 8 9

DWN C.RICHARD 1-5-88
CHK W.LENKER 1-6-88
APVD -
PRODUCT SPEC 108-40025
APPLICATION SPEC 114-40023
WEIGHT -
CUSTOMER DRAWING

Tyco Electronics
Tyco Electronics Corporation
Harrisburg, PA 17105-3608

NAME: RECEPTACLE ASSEMBLY, SIZE 3, 25 POSN, VERTICAL, FRONT METAL SHELL, W/ SCREWLOCKS & BOARDLOCKS, .062 PCB,

SIZE A1 | CAGE CODE 00779 | DRAWING NO C-748612 | RESTRICTED TO -
SCALE 4:1 | SHEET 1 OF 1 | REV G

AMP 4805 REV 31MAR2000

Downloaded from Elcodis.com electronic components distributor