THIS DRAWING IS UNPUBLISHED. RELEASED FOR PUBLICATION -.-.-
© COPYRIGHT - - BY TYCO ELECTRONICS CORPORATION. ALL INTERNATIONAL RIGHTS RESERVED.

LOC	DIST
GP	00

REVISIONS

P	LTR	DESCRIPTION	DATE	DWN	APVD
	A	REVISED PER ECO-08-018735	5AUG2008	ZMR	BAS
	A1	REVISED PER ECO-09-024606	03NOV09	KK	AEG

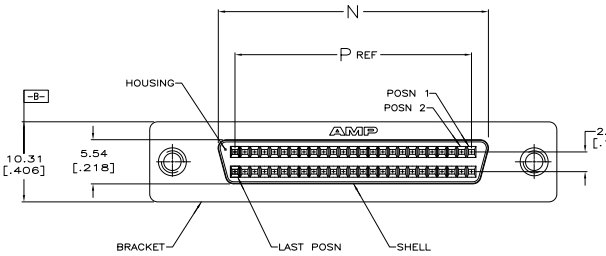

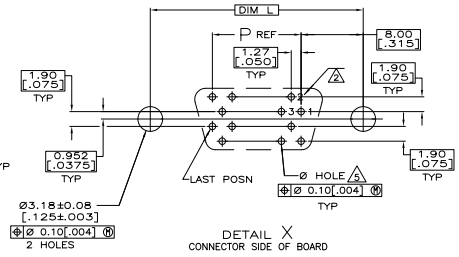

DETAIL X
CONNECTOR SIDE OF BOARD

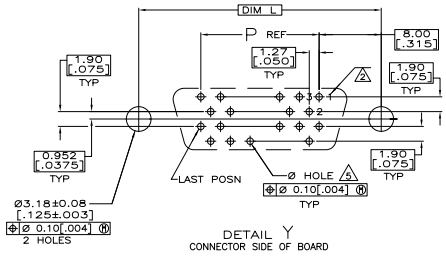

DETAIL Y
CONNECTOR SIDE OF BOARD

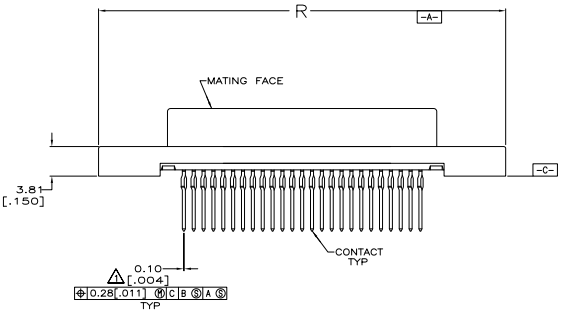

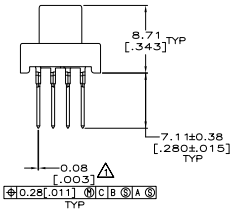

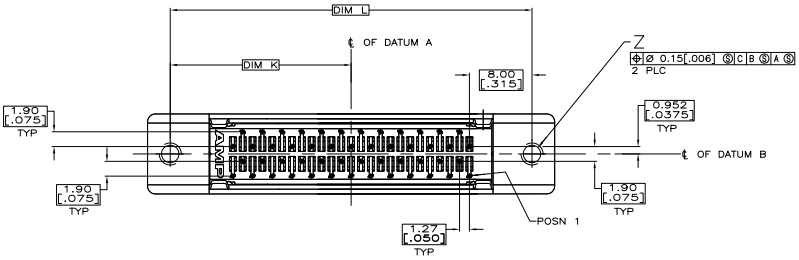

1 POSITION TOLERANCE APPLIES AT CONTACT TIP.

2 POSITION NUMBERS SHOWN FOR REFERENCE ONLY.

3 MATERIAL:
HOUSING – POLYPHTHALAMIDE, BLACK, UL 94–VO RATED.
SHELL – CARBON STEEL.
CONTACTS – PHOSPHOR BRONZE.
BRACKET – ZINC.

4 FINISH:
SHELL – 5.08μm [.000200] MIN NICKEL OVER 1.27μm [.000050] MIN COPPER.
BRACKET – 3.81μm [.000150] MIN NICKEL OVER 5.08μm [.000200] MIN COPPER.
CONTACTS – EITHER 0.76μm [.000030] MIN GOLD PLATE OR GOLD FLASH OVER PALLADIUM NICKEL PLATE, 0.76μm [.000030] MIN TOTAL, FOR A LENGTH OF 0.64 [.025] MIN, 0.13 [.005] MAX FROM MATING END, 1.27μm [.000050] MIN TIN ON OPPOSITE END FOR A LENGTH OF 7.49 [.295] MIN, BOTH OVER 1.27μm [.000050] MIN NICKEL.

5 PC BOARD HOLE RECOMMENDATIONS:
A. HOLES SHOULD BE DRILLED WITH A 0.701 [.0276] DRILL.
B. PC BOARD PLATING TO BE 7.62μm [.000300] MIN TIN OVER 0.025–0.038 [.0010–.0015] COPPER.
C. RECOMMENDED HOLE SIZE AFTER TIN PLATING IS 0.56–0.66 [.022–.026].

6 OBSOLETE PARTS: OBSOLETE CIS STREAMLINING PER D.RENAUD/D.SINISI

6	OBSOLETE	PER DETAIL X	3.07 DIA [.121]	63.88 [2.515]	41.91 [1.650]	46.13 [1.816]	57.91 [2.280]	28.96 [1.140]	68	~~1–5786557–1~~
		PER DETAIL X	4–40 UNC–2B	84.20 [3.315]	62.23 [2.450]	66.45 [2.616]	78.23 [3.080]	39.12 [1.540]	100	5786557–9
		PER DETAIL X	4–40 UNC–2B	63.88 [2.515]	41.91 [1.650]	46.13 [1.816]	57.91 [2.280]	28.96 [1.140]	68	5786557–7
	OBSOLETE	PER DETAIL Y	4–40 UNC–2B	52.45 [2.065]	30.48 [1.200]	34.70 [1.366]	46.48 [1.830]	23.24 [.915]	50	5786557–5
		RECOMMENDED PCB MTG DIMENSIONS	Z	R	P	N	L	K	NO OF POSN	PART NUMBER

COPYRIGHT 2005
TYCO ELECTRONICS CORP
ALL RIGHTS RESERVED

THIS DRAWING IS A CONTROLLED DOCUMENT.

DRN G. ATTADIA – DOCUS 13NOV08
CHK S. SHUEY
APVD M. WALMSLEY 02–25–08

DIMENSIONS: mm [INCHES]
TOLERANCE UNLESS OTHERWISE SPECIFIED: 0 PLC ± – ; 1 PLC ± – ; 2 PLC ± 0.13 [.005] ; 3 PLC ± – ; 4 PLC ± – ; ANGLES ± –

MATERIAL 3 FINISH 4

Tyco Electronics Corporation
Harrisburg, PA 17105–3608

NAME: RECEPTACLE ASSEMBLY, SHIELDED, VERTICAL, FLAT TOP, ACTION PIN FOR .125 TO .200 THICK BD, AMPLIMITE .050 SERIES

PRODUCT SPEC 108–1228
APPLICATION SPEC 114–40029
WEIGHT –
CUSTOMER DRAWING

SIZE A1 CAGE CODE 00779 DRAWING NO C–5786557 RESTRICTED TO –
SCALE 4:1 SHEET 1 OF 1 REV A1

4805 (1/98)

Downloaded from Elcodis.com electronic components distributor