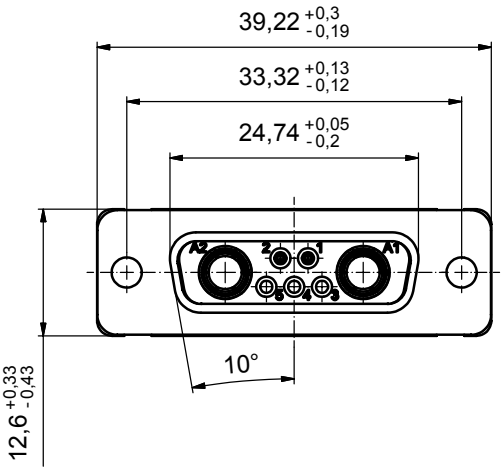


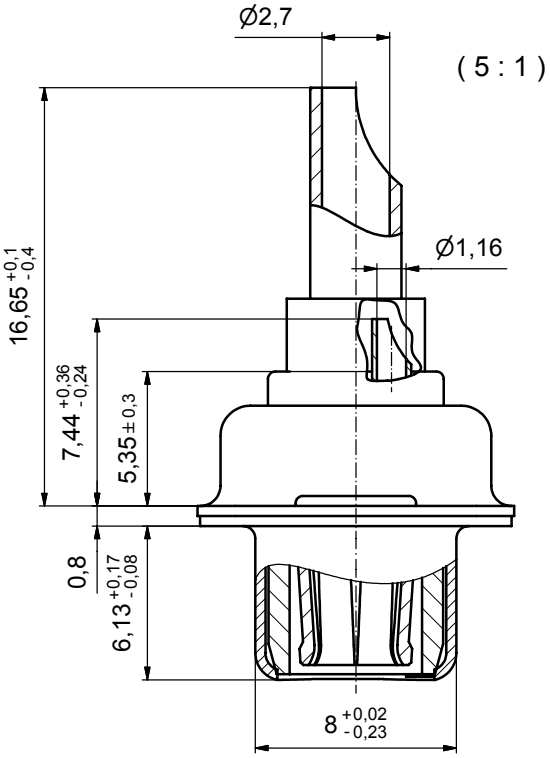


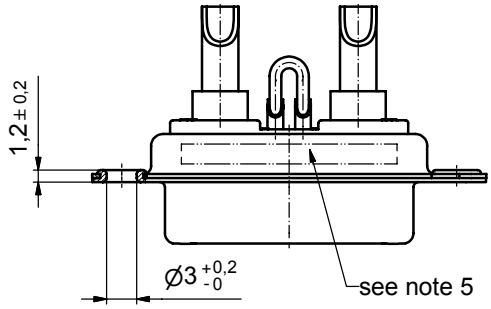


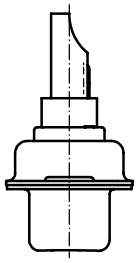

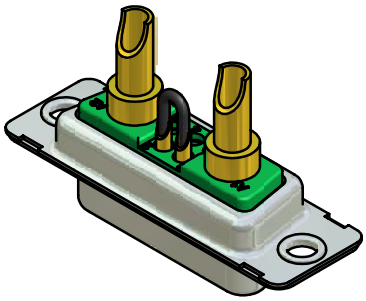

Directive 2002/95/EC „RoHS" Compliant

NOTES:

1. METALSHELLS: STEEL; min. 315µin TIN over 40-80µin NICKEL
2. INSULATORS: PBT GF UL 94 V-0; GREEN
3. HIGH POWER CONTACTS 20A: COPPER ALLOY
   PLATING MATING AREA: 30µin HARD GOLD over min. 50µin NICKEL
   PLATING TERMINATION SIDE: 160-240µin TIN over 80µin NICKEL
   SOLDER CUP ACCEPTS CABLE AWG 12-14
   FEMALE CONTACT ON POS. A1 and A2
4. SIGNAL CONTACTS: COPPER ALLOY; 7,5A nominal
   PLATING MATING AREA: 30µin HARD GOLD over min. 50µin NICKEL
   SOLDER CUP ACCEPTS CABLE AWG 20
   FEMALE CONTACTS WIRE BRIDGE FROM POS. 1 TO POS. 2,
   NO CONTACTS ON POS. 3, 4, 5
5. CONNECTOR IS PART MARKED: 13-000171 CONEC ABC

APPROVAL # FREIGABE # DEBLOCAGE # AUTORIZACION # APPROVAL

CUSTOMER APPROVAL DATE:

NAME: TITLE:

COMPANY NAME:

THIS DRAWING MAY NOT BE COPIED OR REPRODUCED IN ANY WAY, AND MAY NOT BE PASSED ON TO A THIRD PARTY WITHOUT WRITTEN PERMISSION. OWNERSHIP AND COPYRIGHT OF CONEC GmbH

DO NOT ALTER CAD DRAWING BY HAND

| rev. | description | date | name |
|---|---|---|---|
| a | Origin | | |

tolerance — dim. in mm

| | date | name |
|---|---|---|
| drawn | 19.06.07 | Schmidt |
| appd. | 19.06.07 | Koch |
| norm | | |
| d-old | | |

CONEC®

scale: 2:1 (5:1)
material: see notes

title:
Micro TCA Single Port
Female, Solder Cup for cable AWG 12 - 14
with wire bridge on signal contacts

dwg no: 13K1A2072
Inventor 10
DIN-A3
sh: 1

part no: 13-000171

Downloaded from Elcodis.com electronic components distributor