used for: D-SUB FILTER

POS.	A -0.76	B -0.25	C	Part NO.
9	31.19	16.46	$25.00^{+0.12}_{-0.13}$	**242A26860X**
15	39.52	24.79	$33.30^{+0.15}_{-0.1}$	**242A26870X**
25	53.42	38.50	47.04 ±0.13	**242A26880X**
37	69.70	54.96	63.50 ±0.13	**242A26890X**

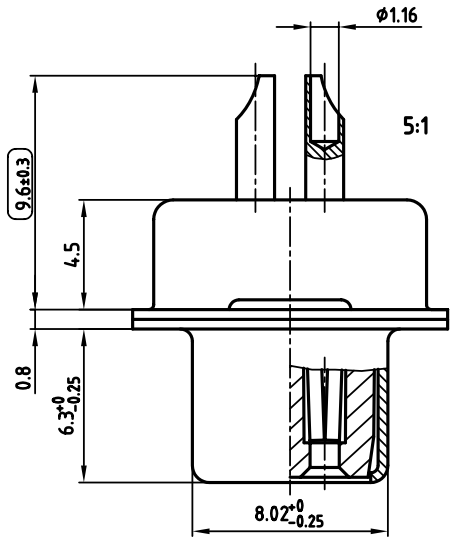

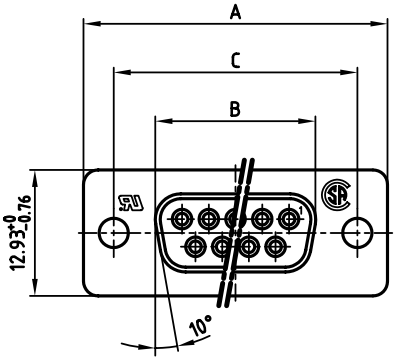

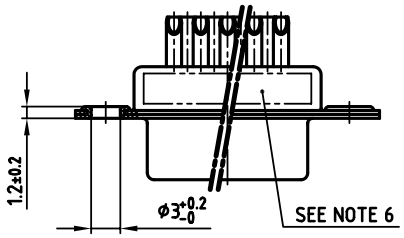

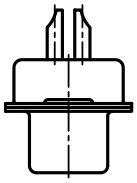

NOTES:

1. METALSHELLS: STEEL; min. 320µ" TIN
2. INSULATORS: PBT GF UL 94 V-0, BLACK
3. CONTACTS: COPPER ALLOY
   PLATING: 8µ" HARD GOLD OVER min. 50µ" NICKEL
   SOLDER CUP ACCEPTS CABLE AWG 20
4. CAPACITANCE: 1300pF ±20%
5. DIELECTRIC WITHSTANDING VOLTAGE: 424 VDC
6. CONNECTOR IS PART MARKED: PART-NO. CONEC ABC
7. ( ) = CHECK DIMENSION

Directive 2002/95/EC „RoHS" Compliant

APPROVAL # FREIGABE # DEBLOCAGE # AUTOR/ZACION # APPROVAL

CUSTOMER APPROVAL DATE:

NAME: TITLE:

COMPANY NAME:

APPROVAL # FREIGABE # DEBLOCAGE # AUTOR/ZACION # APPROVAL

THIS DRAWING MAY NOT BE COPIED OR REPRODUCED IN ANY WAY, AND MAY NOT BE PASSED ON TO A THIRD PARTY WITHOUT WRITTEN PERMISSION. OWNERSHIP AND COPYRIGHT OF CONEC GmbH

DO NOT ALTER CAD DRAWING BY HAND

rev.	description	date	name
a	Origin		

tolerance

2006	date	name
drawn	03.02.	Lehmenkühler
appd.	03.02.	Mickenbecker
norm	DIN 41652	
d-old		

CONEC®

scale: 2:1 (5:1)
material: SEE NOTES

title:
D-SUB FILTER FEMALE
9-37pos. SOLDER CUP

dwg no: 24K1A757
AutoCAD 2004
DIN-A 3
sh: 1/1

part no: SEE TABLE

Downloaded from Elcodis.com electronic components distributor