THIS DRAWING IS UNPUBLISHED. RELEASED FOR PUBLICATION -.-.-
© COPYRIGHT - BY TYCO ELECTRONICS CORPORATION. ALL RIGHTS RESERVED.

LOC	DIST
GP	00

REVISIONS

P	LTR	DESCRIPTION	DATE	DRN	APVD
	A	REVISED PER ECO-06-028339	3JAN/07	ZMR	EDB

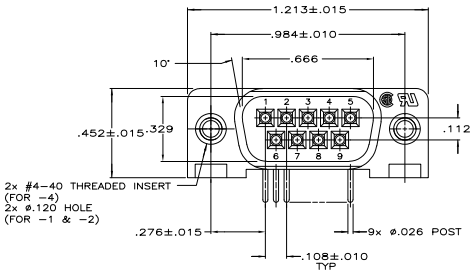

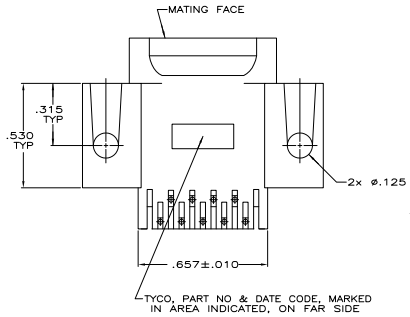

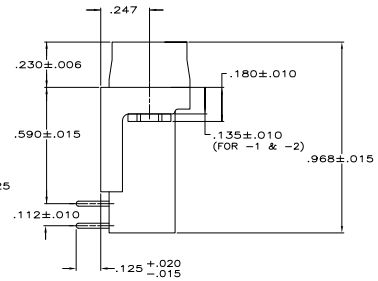

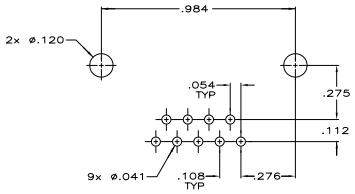

P.C. BOARD MOUNTING DIMENSIONS 3

1. HOUSING: FLAME RETARDANT, 94V-0 RATED, GLASS FILLED, NYLON OR POLYESTER, COLOR: BLACK.
   CONTACTS: BRASS.
   INSERTS: ZINC.
2. CONTACTS: SEE TABLE.
   INSERTS: CLEAR CHROMATE COATING.
3. REFER TO APPLICATION SPEC FOR RECOMMENDED P.C. BOARD MOUNTING DIMENSIONS FOR AUTOMATIC INSERTION.
4. GOLD PLATED FOR A LENGTH OF .150 MIN FROM MATING END, GOLD FLASH IN MATED AREA, .000100 MIN TIN ON SOLDER END, ALL OVER .000050 MIN NICKEL ON ENTIRE CONTACT.
5. GOLD PLATED FOR A LENGTH OF .150 FROM MATING END, .000030 MIN GOLD IN MATED AREA, .000100 MIN TIN ON SOLDER END, ALL OVER .000050 MIN NICKEL ON ENTIRE CONTACT.
   -OR-
   GOLD FLASH OVER PALLADIUM NICKEL PLATED FOR A LENGTH OF .150 FROM MATING END, .000030 MIN PALLADIUM NICKEL IN MATED AREA, .000100 MIN TIN ON SOLDER END, ALL OVER .000050 MIN NICKEL ON ENTIRE CONTACT.

REMARKS	FINISH	PART NUMBER
WITH INSERTS	5	5747467-4
WITH .120 DIA HOLE	5	5747467-2
WITH .120 DIA HOLE	4	5747467-1

COPYRIGHT 2005
TYCO ELECTRONICS CORP
ALL RIGHTS RESERVED

THIS DRAWING IS A CONTROLLED DOCUMENT.

DIMENSIONS: INCHES
TOLERANCE UNLESS OTHERWISE SPECIFIED:
0 PLC ± -
1 PLC ± -
2 PLC ± -
3 PLC ± .005
4 PLC ± -
ANGLES ± 2°
MATERIAL 1
FINISH 2

DRN G.PETERS 19SEP06
CHK S.BOLASH 19SEP06
APVD M.WALMSLEY 19SEP06
PRODUCT SPEC 108-40025
APPLICATION SPEC 114-40015
WEIGHT -

Tyco Electronics Corporation
Harrisburg, Pa 17105-3608

NAME PLUG ASSY, SIZE 1, 9 POSN, RIGHT ANGLE, .590 SERIES, .026 DIA POSTS, AMPLIMITE HD-20

SIZE A1 CAGE CODE 00779 DRAWING NO C-5747467 RESTRICTED TO -

CUSTOMER DRAWING SCALE 4:1 SHEET 1 OF 1 REV A

AMP 4805 REV 31MAR2000

Downloaded from Elcodis.com electronic components distributor