THIS DRAWING IS UNPUBLISHED. RELEASED FOR PUBLICATION
© COPYRIGHT - By - ALL RIGHTS RESERVED.

LOC	DIST	REVISIONS				
GP	00	P	LTR	DESCRIPTION	DATE	DWN	APVD
			P	REVISED PER ECO-11-004835	11MAR11	RK	HMR

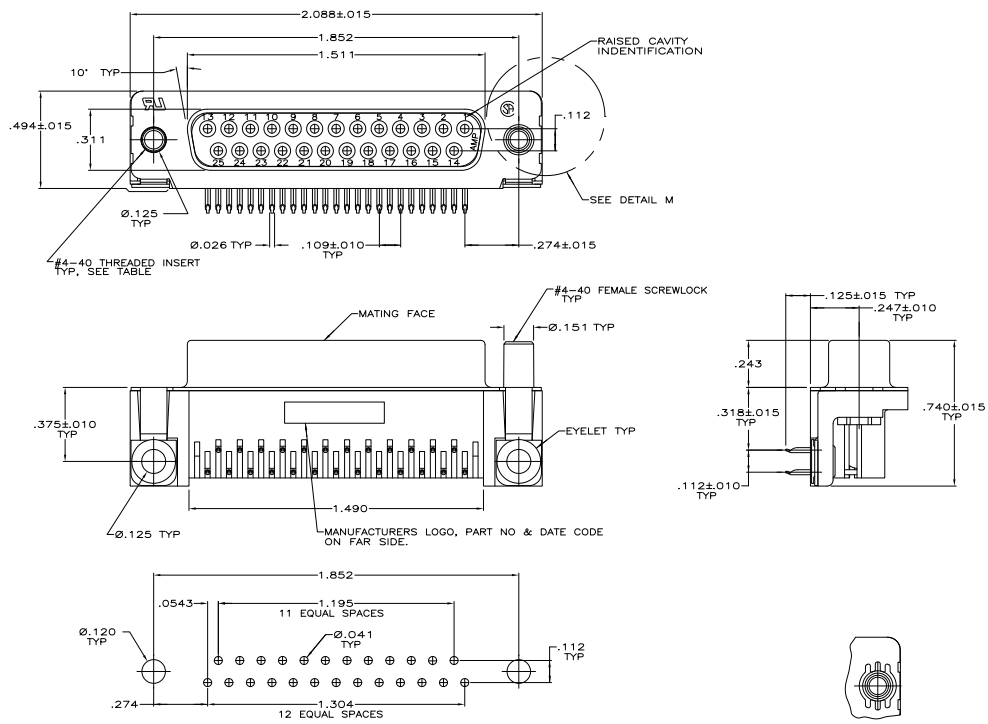

RECOMMENDED P.C. BOARD MOUNTING DIMENSIONS

DETAIL M
FOR -5 & -6 ONLY

1. MOLDED PARTS: FLAME RETARDANT 94V-0 RATED THERMOPLASTIC, BLACK.
SHELL: CARBON STEEL
CONTACTS: PHOSPHOR BRONZE
EYELETS: BRASS
SCREWLOCKS: ZINC
INSERTS: ZINC

2. SHELL: .000100 MIN TIN OVER .000050 MIN COPPER.
CONTACTS: SEE TABLE
EYELETS: .000100 MIN TIN OVER COPPER FLASH.
SCREWLOCKS: CLEAR CHROMATE
INSERTS: CLEAR CHROMATE

3. GOLD FLASH FOR A DISTANCE OF .100 MIN FROM MATING END, .000100 MIN TIN ON OPPOSITE END, ALL OVER .000050 MIN NICKEL.

4. .000030 MIN GOLD FOR A DISTANCE OF .100 MIN FROM MATING END, .000100 MIN TIN ON OPPOSITE END, ALL OVER .000050 MIN NICKEL.

MOUNTING HARDWARE	CONTACT FINISH	PART NUMBER
FEMALE SCREWLOCKS	4	5745783-6
FEMALE SCREWLOCKS	3	5745783-5
THREADED INSERTS	4	5745783-4
THREADED INSERTS	3	5745783-3
NONE	4	5745783-2

COPYRIGHT 2005
TE CONNECTIVITY CORP
ALL RIGHTS RESERVED

THIS DRAWING IS A CONTROLLED DOCUMENT.

DIMENSIONS: INCHES
TOLERANCES UNLESS OTHERWISE SPECIFIED: 0 PLC ± - ; 1 PLC ± - ; 2 PLC ± - ; 3 PLC ± .005 ; 4 PLC ± - ; ANGLES ± 2°
MATERIAL 1
FINISH 2

DWN A. FERNANDEZ-DOCKS 04-08-05
CHK S. BOLASH 04-08-05
APVD M. WALMSLEY 04-08-05
PRODUCT SPEC 108-40025
APPLICATION SPEC 114-40010
WEIGHT -
CUSTOMER DRAWING

TE Connectivity

NAME: RCPT ASSY, SIZE 3, 25 POSN, RTANG, AMPLIMITE HD-20, WITH METAL SHELL, WITH OR WITHOUT SCREWLOCKS OR INSERTS

SIZE A1 | CAGE CODE 00779 | DRAWING NO C-5745783 | RESTRICTED TO -
SCALE 4:1 | SHEET 1 OF 1 | REV P

4805 (3/11)

Downloaded from Elcodis.com electronic components distributor