THIS DRAWING IS UNPUBLISHED. RELEASED FOR PUBLICATION ,19 .
© COPYRIGHT 19 BY AMP INCORPORATED. ALL RIGHTS RESERVED.

LOC	DIST
AR	84

REVISIONS

Z	LTR	DESCRIPTION	DATE	DWN	APVD
	0	RELEASED PER NPR 5575	05 OCT 96	–	–
		WAS 96-1997-9-2			
	A	REV PER EC 0410-186-97	13 MAY 97	CD	JM

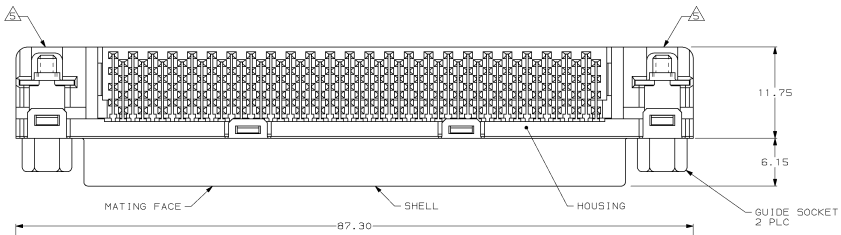

1. HOUSING AND TINE PLATE: POLYESTER, NATURAL.
CONTACTS: PHOSPHOR BRONZE.
SHELL: CARBON STEEL.
RCPT G-PLATE: STAINLESS STEEL.
GUIDE SOCKET AND RETENTION LEG: BRASS.

2. SHELL: 3.00µm MIN NICKEL OVER 1.30µm MIN COPPER.
RETENTION LEG: 2.00µm MIN TIN-LEAD OVER 1.00µm MIN NICKEL.
GUIDE SOCKET: NICKEL OVER COPPER.
CONTACTS: 0.76µm MIN GOLD FOR A LENGTH OF 1.10 MIN FROM MATING END,
2.54 MIN TIN-LEAD FOR A LENGTH OF 2.80 MIN FROM OPPOSITE END,
BOTH OVER 1.27µm MIN NICKEL.

3. CONTACTS 101,102,149,150,151,152,199, AND 200 ARE SEQUENCED TOWARD MATING FACE AS SHOWN, ALL OTHERS ARE SEQUENCED IN A STAGGERED PATTERN.

4. DATUMS AND BASIC DIMENSIONS ESTABLISHED BY CUSTOMER.

5. DATE CODE MAY BE MARKED ON EITHER END.

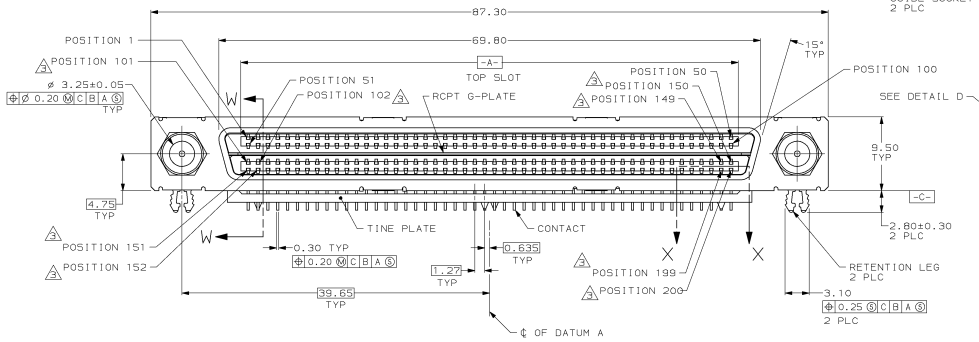

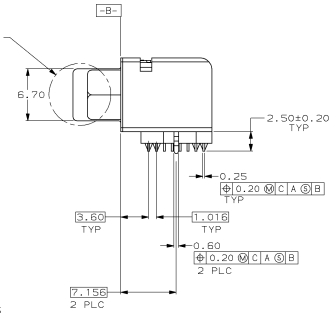

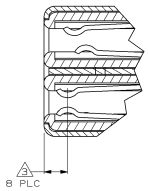

DETAIL D
SCALE 10:1

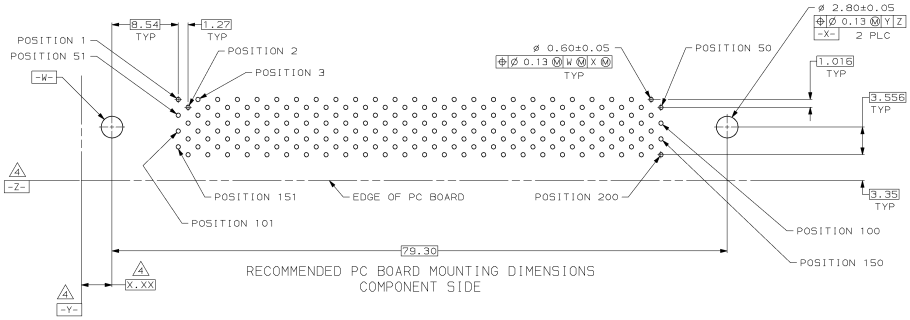

RECOMMENDED PC BOARD MOUNTING DIMENSIONS
COMPONENT SIDE

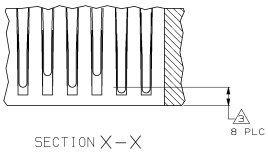

SECTION X–X
SCALE 10:1

PART NUMBER
787882-1

THIS DRAWING IS A CONTROLLED DOCUMENT.

DIMENSIONS: mm
TOLERANCES UNLESS OTHERWISE SPECIFIED:
0 PLC ±.
1 PLC ±.
2 PLC ±0.25
3 PLC ±.
4 PLC ±.
ANGLES ±30'
MATERIAL 1
FINISH 2

DWN C.DORWART 08 OCT 96
CHK J.MOSIER 14 OCT 96
APVD J.MOSIER 14 OCT 96
PRODUCT SPEC –
APPLICATION SPEC –
WEIGHT –

CUSTOMER DRAWING

AMP Incorporated
Harrisburg, PA 17105-3608

NAME RECEPTACLE ASSEMBLY, 200 POSITION, RIGHT ANGLE, .050, CHAMP™

SIZE A1 | CAGE CODE 00779 | DRAWING NO C-787882

SCALE 4:1 | SHEET 1 OF 1 | REV A

AMP 406S REV 20FEB96

13-MAY-97 11:28:58 amp02X2 /home/nsrv4306/dsk01/dept4120/amp02X2/edmond

Downloaded from Elcodis.com electronic components distributor