THIS DRAWING IS UNPUBLISHED. RELEASED FOR PUBLICATION ,19 .
© COPYRIGHT 19 BY AMP INCORPORATED. ALL RIGHTS RESERVED.

LOC	DIST
AR	84

REVISIONS

ZONE	LTR	DESCRIPTION	DATE	DWN	APVD
	0	RELEASED PER NPR 5578	-	-	-
		WAS 96-1999-8-2			
	A	REV PER EC 0410-361-97	10 SEP 97	CD	JM

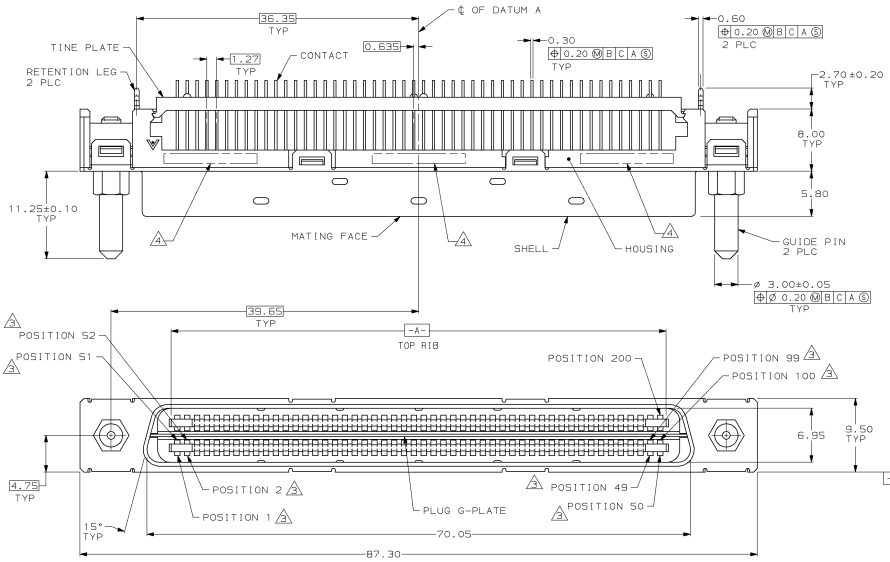

1. HOUSING AND TINE PLATE: POLYESTER, NATURAL.
   CONTACT: COPPER ALLOY.
   SHELL: CARBON STEEL.
   RETENTION LEG AND GUIDE PIN: BRASS.
   PLUG G-PLATE: STAINLESS STEEL.
2. SHELL: 3.00µm MIN NICKEL OVER 1.30µm MIN COPPER.
   RETENTION LEG: 2.00µm MIN TIN-LEAD OVER 1.00µm MIN NICKEL.
   GUIDE PIN: NICKEL OVER COPPER.
   CONTACTS: 0.76µm MIN GOLD FOR A LENGTH OF 3.00 MIN FROM MATING END,
   2.54 µm MIN TIN-LEAD FOR A LENGTH OF 3.90 MIN FROM OPPOSITE END,
   BOTH OVER 1.27µm MIN NICKEL.
3. CONTACTS 1,2,49,50,51,52,99, AND 100 ARE SEQUENCED TOWARDS MATING FACE.
4. DATE CODE MAY BE MARKED ON THIS SIDE, IN ONE OF THE LOCATIONS SHOWN.

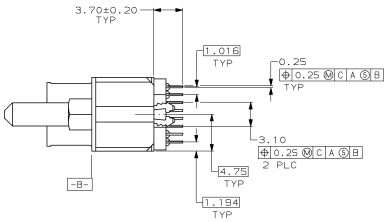

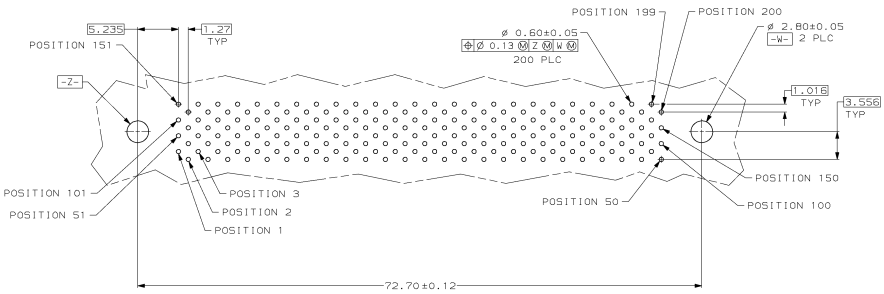

RECOMMENDED PC BOARD MOUNTING DIMENSIONS
COMPONENT SIDE

NO OF POSN	PART NUMBER
200	787886-1

THIS DRAWING IS A CONTROLLED DOCUMENT.

DIMENSIONS: mm
TOLERANCES UNLESS OTHERWISE SPECIFIED:
0 PLC ±-
1 PLC ±0
2 PLC ±0.25
3 PLC ±-
4 PLC ±-
ANGLES ±2°
MATERIAL 1
FINISH 2

DWN C.CORWART 10 MAR 97
CHK J.MOSIER 14 MAR 97
APVD J.MOSIER 14 MAR 97
PRODUCT SPEC –
APPLICATION SPEC –
WEIGHT –

AMP Incorporated
Harrisburg, PA 17105-3608

NAME PLUG ASSEMBLY, 200 POSITION, VERTICAL, .050, CHAMP™

SIZE A1 CAGE CODE 00779 DRAWING NO C-787886

CUSTOMER DRAWING SCALE 4:1 SHEET 1 OF 1 REV A

AMP 406S REV 20FEB96

10-SEP-97 11:00:27 amp02202 /home/nsrv4306/dsk01/dept4120/amp02202/edmond

Downloaded from Elcodis.com electronic components distributor