THIS DRAWING IS UNPUBLISHED. RELEASED FOR PUBLICATION -.-.-
© COPYRIGHT - BY TYCO ELECTRONICS CORPORATION. ALL RIGHTS RESERVED.

LOC	DIGIT	REVISIONS					
GP	00	P	LTR	DESCRIPTION	DATE	DRN	APVD
			L	REVISED PER ECO-05-010789	24JUL06	BM	SS

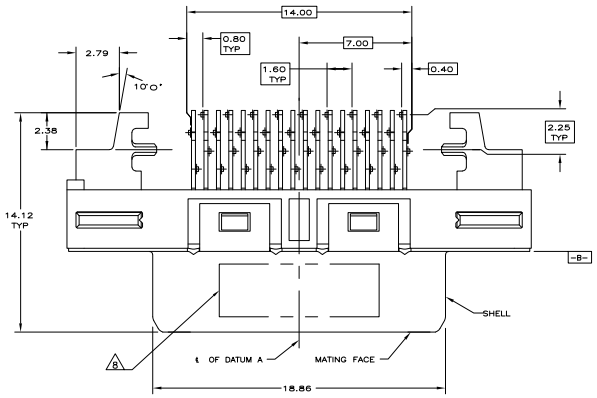

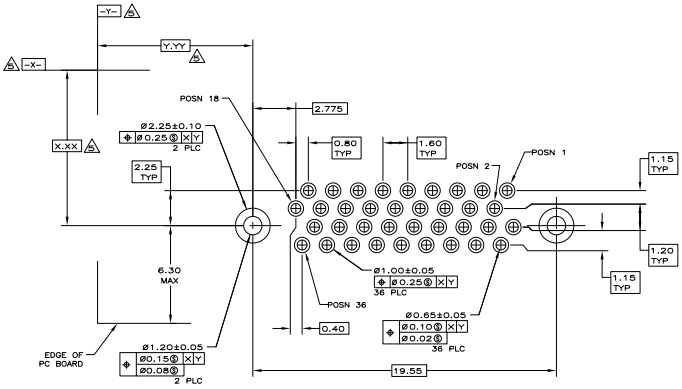

PC BOARD MOUNTING DIMENSIONS 5

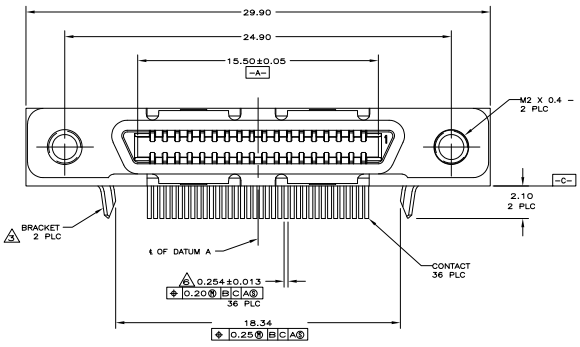

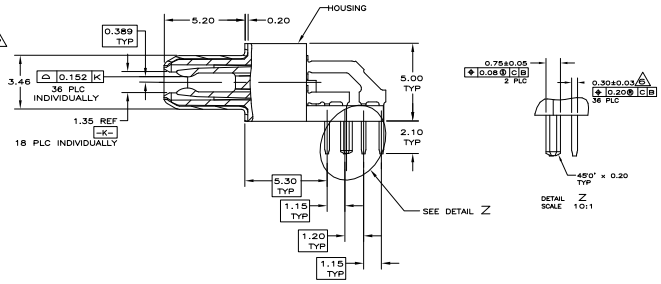

1. HOUSING: THERMOPLASTIC, BLACK, UL 94V-0 RATED.
   SHELL: CARBON STEEL.
   CONTACTS: PHOSPHOR BRONZE.
   BRACKETS: NICKEL SILVER.
2. SHELL: 5.08μm MIN NICKEL OVER 2.54μm MIN COPPER.
   CONTACTS: 0.76μm MIN GOLD ON MATING END, 3.75μm MIN TIN-LEAD ON SOLDER TAILS, BOTH OVER 1.27μm MIN NICKEL ON ENTIRE CONTACT.
3. BRACKETS AND CONTACTS DESIGNED FOR USE ON 1.60±0.15 THICK PC BOARD WITH PLATED THRU MOUNTING HOLES.
4. RECEPTACLE ASSEMBLY DESIGNED FOR USE WITH 1.12±0.08 THICK PANEL.
5. DATUMS AND DIMENSIONS ESTABLISHED BY CUSTOMER.
6. POSITION TOLERANCE APPLIES AT CONTACT TIP ONLY.
7. MAXIMUM TORQUE 0.45 N-M.
8. DATE CODE MARKED IN APPROXIMATE AREA SHOWN.

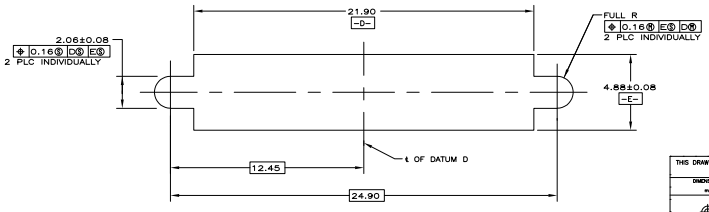

PANEL CUT-OUT DIMENSIONS 4

787973-1
PART NUMBER

THIS DRAWING IS A CONTROLLED DOCUMENT.	TITLE T.SHUEY / DR J.GERACE	Tyco Electronics Corporation Harrisburg, PA 17105-3608	
DIMENSIONS: mm	TOLERANCE UNLESS OTHERWISE SPECIFIED: 0 PLC ± - / 1 PLC ± - / 2 PLC ± 0.13 / 3 PLC ± - / 4 PLC ± - / ANGLES ± 0° 0'	APVD M.WALMSLEY / PRODUCT SPEC 108-1471-1 / APPLICATION SPEC 114-6057	NAME RECEPTACLE ASSEMBLY, 36 POSITION, SHIELDED, RIGHT ANGLE, CHAMP 0.8mm
MATERIAL 1	FINISH 2	WEIGHT -	SIZE A1 / CAGE CODE 00779 / DRAWING NO C-787973 / RESTRICTED TO -
		CUSTOMER DRAWING	SCALE 8:1 / SHEET 1 OF 1 / REV L

AMP 4805 REV 31MM2000

Downloaded from Elcodis.com electronic components distributor