THIS DRAWING IS UNPUBLISHED. RELEASED FOR PUBLICATION -.-.-
© COPYRIGHT - BY TYCO ELECTRONICS CORPORATION. ALL RIGHTS RESERVED.

| LOC | DIST |
|---|---|
| GP | 00 |

REVISIONS

| P | LTR | DESCRIPTION | DATE | DRN | APVD |
|---|---|---|---|---|---|
| | B | REVISED PER ECO-08-007327 | 08APR08 | BM | WM |
| | B1 | REVISED PER ECO-09-024927 | 07NOV09 | KK | AEG |

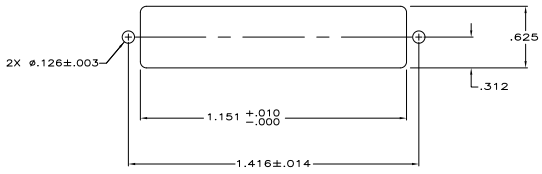


SUGGESTED REAR PANEL MOUNTING CUTOUT DIMENSIONS 5
SCALE 2:1

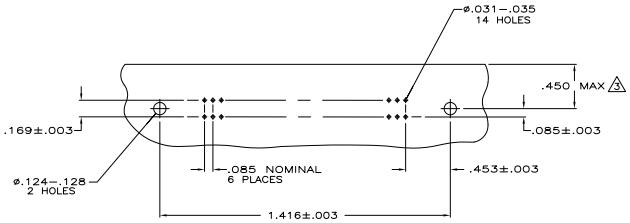


SUGGESTED PRINTED CIRCUIT BOARD MOUNTING DIMENSIONS
SCALE 2:1

1. MATERIAL:
HOUSING, BRACKET, PLATE & COMB – THERMOPLASTIC, BLACK, 94V–0 RATED.
TERMINALS – HIGH STRENGTH COPPER ALLOY PLATED WITH EITHER .000030 MIN GOLD PLATE OR GOLD FLASH OVER PALLADIUM NICKEL PLATE, .000030 MIN TOTAL ON MATING SURFACE. .000120 MIN TIN PLATE ON TAILS. ALL OVER .000050 MIN NICKEL UNDERPLATE OVER ENTIRE TERMINAL.
2. TERMINAL 1 IS LOCATED IN THIS ROW FOR STANDARD ORIENTATION, 5552738–1 ONLY.
3. MAXIMUM DIMENSION FOR REAR PANEL MOUNTING.
4. TERMINAL SUPPORT PLATE CLEARANCE FOR TERMINAL STRAIN RELIEF AND FLUX REMOVAL.
5. MAXIMUM PANEL THICKNESS: .062.
6. TERMINAL 1 IS LOCATED IN THIS ROW FOR REVERSE ORIENTATION, 5552738–2 ONLY.
7. DETAILS "A" AND "B" ARE VIEWED FROM MATING SIDE OF RECEPTACLE ASSEMBLY.
8. FOR USE WITH A NO.4 BT TYPE SELF–TAPPING SCREW.
9. OBSOLETE PARTS: OBSOLETE CIS STREAMLINING PER D.RENAUD/D.SINISI

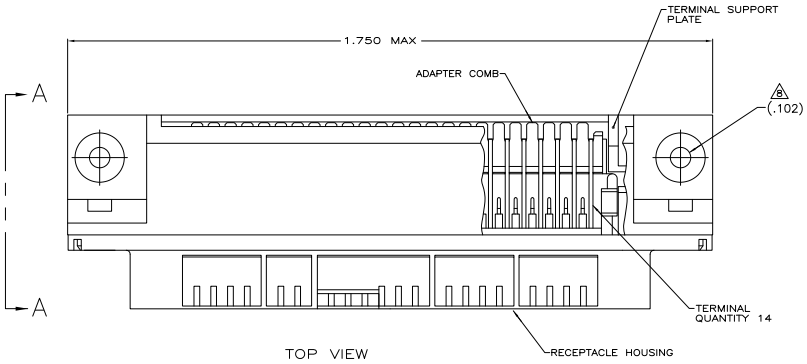


TOP VIEW

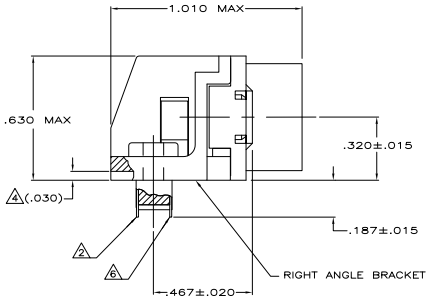


SIDE VIEW A–A

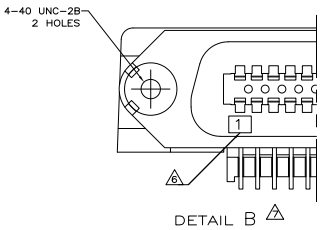


DETAIL B 7
REVERSE ORIENTATION

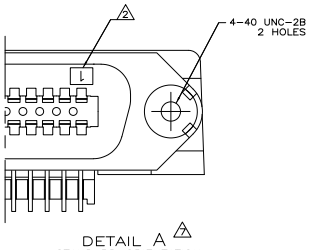


DETAIL A 7
STANDARD ORIENTATION

| | | | |
|---|---|---|---|
| 9 OBSOLETE | SELF TAPPING 8 | SEE DETAIL B 6 | ~~5552738–2~~ |
| | SELF TAPPING 8 | SEE DETAIL A 2 | 5552738–1 |
| | TYPE OF MOUNTING | DESCRIPTION | PART NUMBER |

THIS DRAWING IS A CONTROLLED DOCUMENT.

DIMENSIONS: INCHES

TOLERANCE UNLESS OTHERWISE SPECIFIED: 0 PLC ± – ; 1 PLC ± – ; 2 PLC ± – ; 3 PLC ± .005 ; 4 PLC ± – ; ANGLES ± –

MATERIAL 1 FINISH 1

DR B. MCMASTER 15AUG05
DE W. MILLHIMES 15AUG05
APVD M. WALMSLEY 15AUG05
PRODUCT SPEC –
APPLICATION SPEC –
WEIGHT –

Tyco Electronics Corporation
Harrisburg, PA 17105–3608

NAME RECEPTACLE ASSEMBLY, 14 POSITION, RIGHT ANGLE, PRINTED CIRCUIT BOARD, (CHAMP–LOK, SELF TAPPING)

SIZE A1 CAGE CODE 00779 DRAWING NO C–5552738 RESTRICTED TO –

CUSTOMER DRAWING SCALE 4:1 SHEET 1 OF 1 REV B1

AMP 4805 REV 31MR2000

Downloaded from Elcodis.com electronic components distributor