THIS DRAWING IS UNPUBLISHED. RELEASED FOR PUBLICATION: .YY .
© COPYRIGHT 19 BY AMP INCORPORATED. ALL RIGHTS RESERVED.

LOC	DIST
GP	00

REVISIONS

P	LTR	DESCRIPTION	DATE	DWN	APVD
	D	REVISED PER EC 0S13-0543-04	12MAY05	JG	SS
	D1	REVISED PER ECO-10-000443	18JAN10	KK	HMR

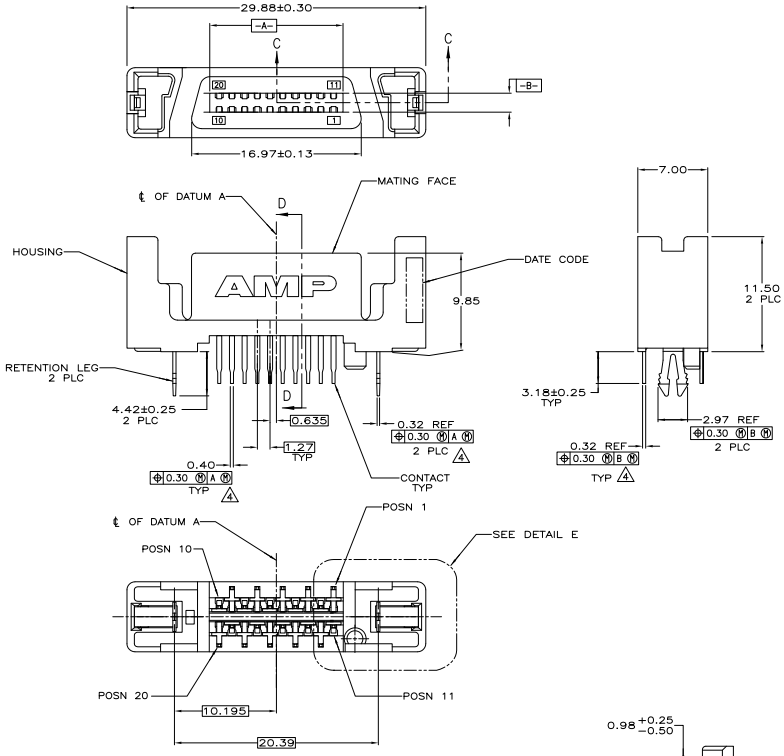

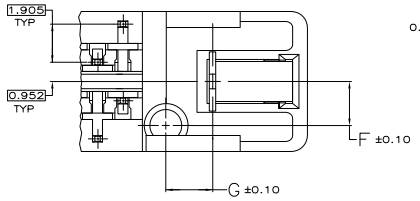

DETAIL E
SCALE 10:1

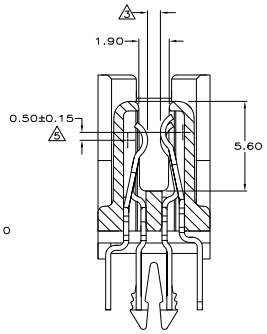

SECTION D–D
SCALE 8:1

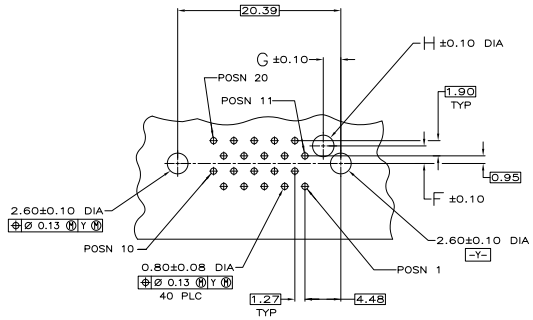

RECOMMENDED PC BOARD
MOUNTING DIMENSIONS
COMPONENT SIDE
SCALE 4:1

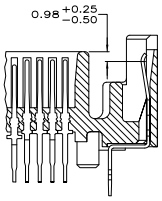

SECTION C–C

1. HOUSING: LCP, UL 94V-0 RATED, BLACK.
   CONTACTS: PHOSPHOR BRONZE.
   RETENTION LEGS: BRASS.
2. CONTACTS: 0.76 µm MIN GOLD IN CONTACT AREA,
   3.81 µm MIN TIN-LEAD ON SOLDER TINES, BOTH
   OVER 1.27 µm MIN NICKEL.
   RETENTION LEGS: 3.81 µm MIN TIN-LEAD OVER 1.27 µm MIN NICKEL.
3. CONNECTOR WILL ACCOMMODATE MATING PRINTED CIRCUIT BOARD OF 1.60±0.07 THICKNESS.
4. POSITION TOLERANCE APPLIES AT CONTACT TIP ONLY.
5. CONTACTS 1-10,15,16 ARE POSITIONED AWAY FROM MATING FACE (SECOND MATE).
   CONTACTS 11-14 AND 17-20 ARE POSITIONED TOWARD MATING FACE (FIRST MATE).
6. CONTACTS: 0.76 µm MIN GOLD IN CONTACT AREA,
   3.81 µm MIN MATTE TIN ON SOLDER TINES, BOTH
   OVER 1.27 µm MIN NICKEL.
   RETENTION LEGS: 3.81 µm MIN HALT TIN.

OBSOLETE 1. OBSOLETE PARTS: OBSOLETE CIS STREAMLINING PER D.RENAUD/D.SINISI

1	–	–	–	787646-4
OBSOLETE 1	2.60	2.19	2.20	~~787646-3~~
1	–	–	–	787646-2
1	2.60	2.19	2.20	787646-1
FINISH	H	G	F	PART NUMBER

THIS DRAWING IS CONSIDERED PROPRIETARY TO AMP INCORPORATED. NO REPRODUCTION OR DISCLOSURE TO THIRD PARTIES WITHOUT WRITTEN CONSENT.	DRN D.BROCKWAY 11-22-95	AMP	AMP Incorporated Harrisburg, PA 17105-3608
DIMENSIONS: mm	CHK C.DORWART 11-28-95		
TOLERANCES UNLESS OTHERWISE SPECIFIED: 0 PLC ±-; 1 PLC ±-; 2 PLC ±0.10; 3 PLC ±-; 4 PLC ±-; ANGLE ±-	APVD J.SWANK 11-30-95	NAME	RECEPTACLE ASSEMBLY, VERTICAL, 20 POSN, CHAMP BLINDMATE .050 SERIES I
	PRODUCT SPEC –		
	APPLICATION SPEC 114-6061	SIZE A1	CAGE CODE 00779
MATERIAL 1	WEIGHT –	DRAWING NO C-787646	
FINISH SEE TABLE	CUSTOMER DRAWING	SCALE 5:1	SHEET 1 OF 1 REV D1

Downloaded from Elcodis.com electronic components distributor