THIS DRAWING IS UNPUBLISHED. RELEASED FOR PUBLICATION - - -
© COPYRIGHT - BY TYCO ELECTRONICS CORPORATION. ALL RIGHTS RESERVED.

LOC	DIST
GP	00

REVISIONS

P	LTR	DESCRIPTION	DATE	DWN	APVD
	H	REVISED PER ECO-08-007327	17APR08	BM	WM

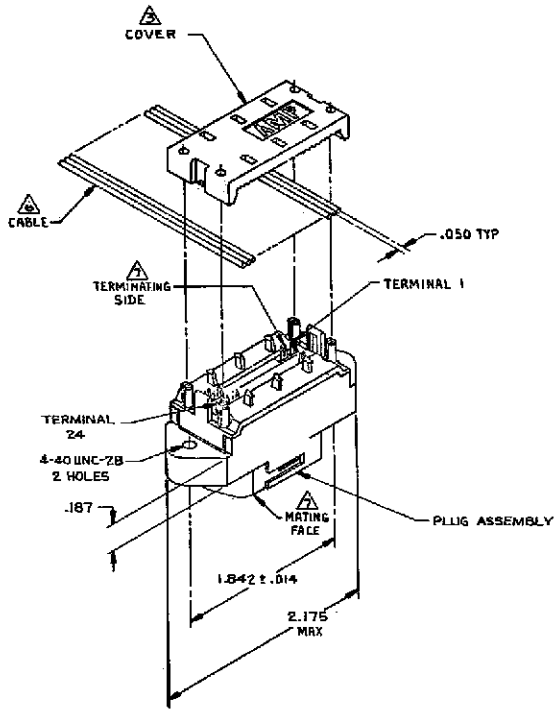

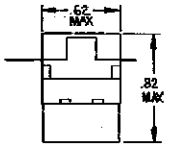

END VIEW

1. THE CONTACT SURFACES OF THE TERMINALS ARE COATED WITH LUBRICANT.
2. MATERIAL:
   HOUSING & COVER – THERMOPLASTIC, BLACK.
   TERMINALS – PHOS BRONZE PLATED WITH EITHER .000030 MINIMUM GOLD PLATE OR GOLD FLASH OVER PALLADIUM NICKEL PLATE, .000030 MIN TOTAL ON MATING SURFACE. GOLD FLASH PLATED ON TERMINATING SIDE. .000050 MINIMUM NICKEL UNDERPLATE OVER ENTIRE TERMINAL.
3. COVER SHOWN LOOSE BUT SHIPPED ASSEMBLED.
4. WIRE RANGE: 26 AWG SOLID THRU 30 AWG SOLID AND 28 AWG STRANDED RIBBON CABLE.
5. ALL DIMENSIONS SHOWN ARE FOR REFERENCE ONLY UNLESS OTHERWISE SPECIFIED.
6. FLAT CABLE SHALL BE FURNISHED BY CUSTOMER.
7. MATING FACE CONSISTS OF TWO ROWS OF TERMINALS ON .085 CENTERS. TERMINATING SIDE CONSISTS OF TERMINALS ON .100 CENTERS FOR AN EFFECTIVE .050 TERMINATION.
8. FOR MORE INFORMATION REFER TO AMP PRODUCT SPECIFICATION 108-6076 & APPLICATION SPEC 114-6030.

553598

AS SHOWN	553598-1
DESCRIPTION	PART NUMBER

THIS DRAWING IS A CONTROLLED DOCUMENT.

DIMENSIONS: INCHES

TOLERANCES UNLESS OTHERWISE SPECIFIED:
0 PLC ± –
1 PLC ± –
2 PLC ± –
3 PLC ± –
4 PLC ± –
ANGLES ± –

MATERIAL 2 FINISH 2

DWN Z. REAM 15/MAR/07
CHK W. MILLHIMES 15/MAR/07
APVD W. MILLHIMES 15/MAR/07
PRODUCT SPEC
APPLICATION SPEC
WEIGHT –

Tyco Electronics
Tyco Electronics Corporation
Harrisburg, PA 17105-3608

NAME PLUG ASSEMBLY, 24 POSITION SCREW LOCK, LOW PROFILE, CHAMP LATCH

SIZE A2 CAGE CODE 00779 DRAWING NO C-553598 RESTRICTED TO –

CUSTOMER DRAWING SCALE 2:1 SHEET 1 OF 1 REV H

AMP 1471-9 REV 31MAR2000

Downloaded from Elcodis.com electronic components distributor