THIS DRAWING IS UNPUBLISHED. RELEASED FOR PUBLICATION -.-.-
© COPYRIGHT - BY TYCO ELECTRONICS CORPORATION. ALL RIGHTS RESERVED.

LOC	DIST
GP	00

REVISIONS

P	LTR	DESCRIPTION	DATE	DWN	APVD
	O	RELEASED PER EC 0513-0556-04	08-01-05	JA	JG

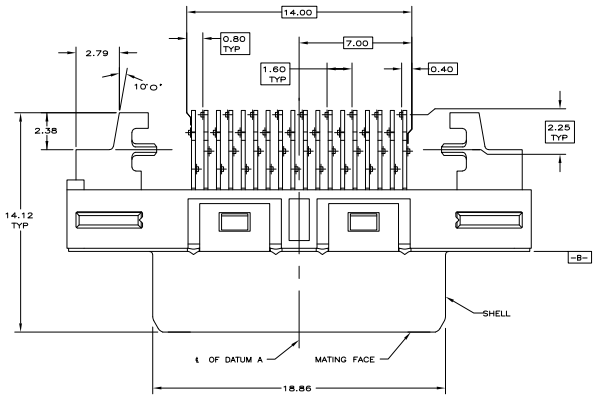

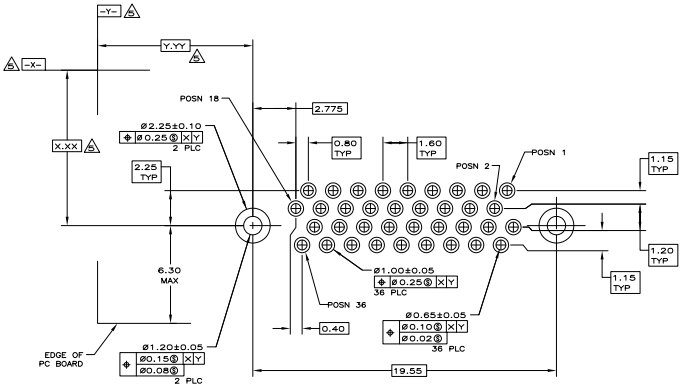

PC BOARD MOUNTING DIMENSIONS 5

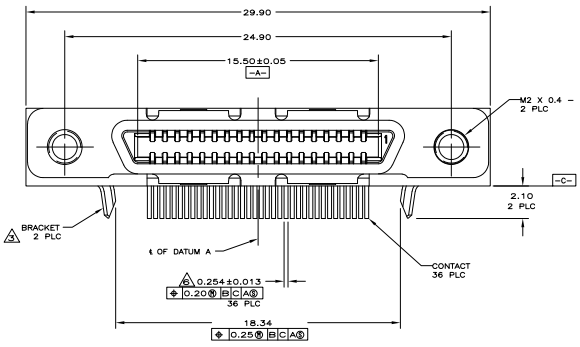

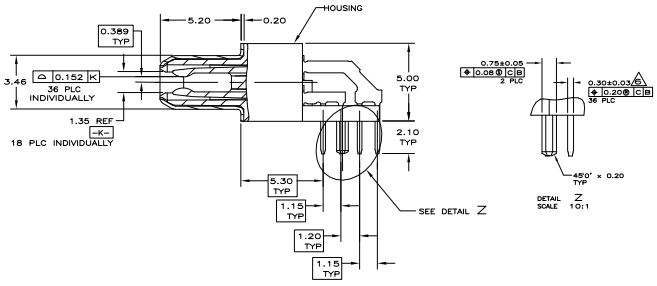

1. HOUSING: THERMOPLASTIC, BLACK, UL 94V-0 RATED.
   SHELL: CARBON STEEL.
   CONTACTS: PHOSPHOR BRONZE.
   BRACKETS: NICKEL SILVER.
2. SHELL: 5.08μm MIN NICKEL OVER 2.54μm MIN COPPER.
   CONTACTS: 0.76μm MIN GOLD ON MATING END, 3.75μm MIN TIN ON SOLDER TAILS, BOTH OVER 1.27μm MIN NICKEL ON ENTIRE CONTACT.
3. BRACKETS AND CONTACTS DESIGNED FOR USE ON 1.60±0.15 THICK PC BOARD WITH PLATED THRU MOUNTING HOLES.
4. RECEPTACLE ASSEMBLY DESIGNED FOR USE WITH 1.12±0.08 THICK PANEL.
5. DATUMS AND DIMENSIONS ESTABLISHED BY CUSTOMER.
6. POSITION TOLERANCE APPLIES AT CONTACT TIP ONLY.

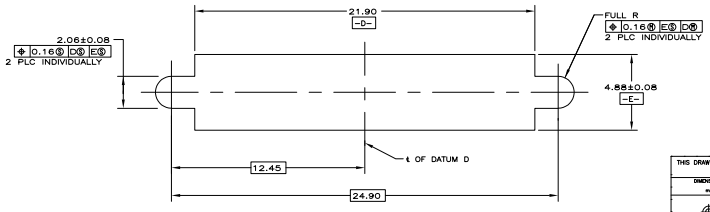

PANEL CUT-OUT DIMENSIONS 4

COPYRIGHT 2005
TYCO ELECTRONICS CORP
ALL RIGHTS RESERVED

5787973-1
PART NUMBER

THIS DRAWING IS A CONTROLLED DOCUMENT.

DRAWN	J. ALCORTA - DOCKS	08-01-05
CHK	S. SHUEY	08-01-05
APVD	M. WALMSLEY	08-01-05

DIMENSIONS: mm
TOLERANCE UNLESS OTHERWISE SPECIFIED: 0 PLC ± -; 1 PLC ± -; 2 PLC ± 0.13; 3 PLC ± -; 4 PLC ± -; ANGLES ± 0° 0'
MATERIAL 1
FINISH 2

Tyco Electronics Corporation
Harrisburg, Pa 17105-3608

PRODUCT SPEC 108-1471-1
APPLICATION SPEC 114-6057
WEIGHT -

NAME: RECEPTACLE ASSEMBLY, 36 POSITION, SHIELDED, RIGHT ANGLE, CHAMP 0.8mm

SIZE	CAGE CODE	DRAWING NO	RESTRICTED TO
A1	00779	C-5787973	—

CUSTOMER DRAWING | SCALE 8:1 | SHEET 1 OF 1 | REV O

AMP 4805 REV 31MAR2000

Downloaded from Elcodis.com electronic components distributor