THIS DRAWING IS UNPUBLISHED. RELEASED FOR PUBLICATION -.-.-
© COPYRIGHT - BY TYCO ELECTRONICS CORPORATION. ALL RIGHTS RESERVED.

LOC	DIST
GP	00

REVISIONS

P	LTR	DESCRIPTION	DATE	DRN	APVD
	C	REVISED PER ECO-08-007327	17APR08	BM	WM

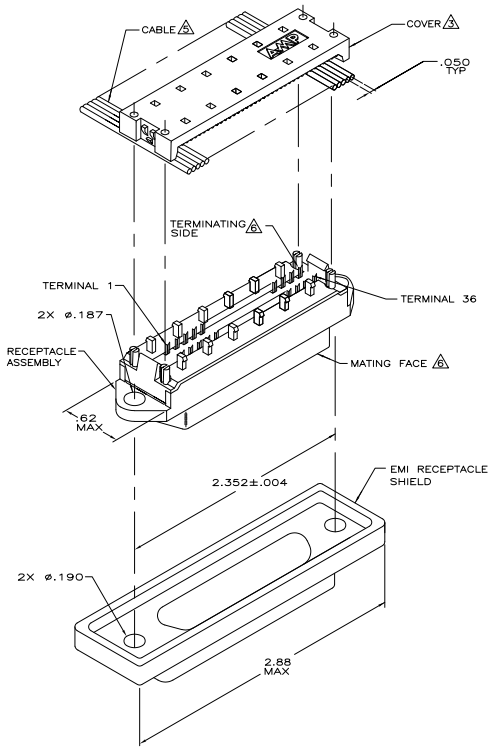

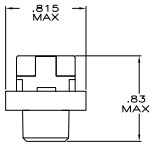

END VIEW

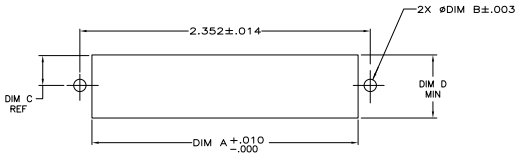

SUGGESTED PANEL CUTOUT 7

1. THE CONTACT SURFACES OF THE TERMINALS ARE COATED WITH LUBRICANT.

2. MATERIAL:
HOUSING AND COVER – POLYPHENYLENE OXIDE (BLACK).
TERMINALS – PHOS BRONZE PLATED WITH EITHER .000030 MINIMUM GOLD PLATE OR GOLD FLASH OVER PALLADIUM NICKEL PLATE, .000030 MIN TOTAL ON MATING SURFACE. GOLD FLASH PLATED ON TERMINATING SIDE. .000050 MINIMUM NICKEL UNDERPLATE OVER ENTIRE TERMINAL.
EMI SHIELD: NICKEL PLATED DIE CASTING.

3. COVER SHOWN LOOSE BUT SHIPPED ASSEMBLED.

4. WIRE RANGE: 26 AWG SOLID THRU 30 AWG SOLID AND 28 AWG STRANDED RIBBON CABLE.

5. FLAT CABLE SHALL BE FURNISHED BY CUSTOMER.

6. MATING FACE CONSISTS OF TWO ROWS OF TERMINALS ON .085 CENTERS. TERMINATING SIDE CONSISTS OF TERMINALS ON .100 CENTERS FOR AN EFFECTIVE .050 TERMINATION.

7. PANEL THICKNESS RANGE:
OUTSIDE MOUNTING – .125 MAX.
INSIDE MOUNTING – .062 MAXIMUM.

8. EMI SHIELD SHIPPED LOOSE.

9. FOR MORE INFORMATION REFER TO AMP PRODUCT SPECIFICATION 108–6076 & APPLICATION SPEC 114–6030.

DIM D	DIM C	DIM B	DIM A	DESCRIPTION	PART NUMBER
.620	.310	.149	2.085	REAR PANEL MOUNTING	5554348–1
.640	.320	.126	2.000	FRONT PANEL MOUNTING	

THIS DRAWING IS A CONTROLLED DOCUMENT.

DIMENSIONS: INCHES

TOLERANCE UNLESS OTHERWISE SPECIFIED: 0 PLC ± – ; 1 PLC ± – ; 2 PLC ± – ; 3 PLC ± .005 ; 4 PLC ± – ; ANGLES ± –

MATERIAL 2 FINISH 2

DR B. MCMASTER 18JAN08
DE W. MILLHIMES 18JAN08
APD W. MILLHIMES 18JAN08

PRODUCT SPEC 108–6076
APPLICATION SPEC 114–6030
WEIGHT –

Tyco Electronics
Tyco Electronics Corporation
Harrisburg, PA 17105–3608

NAME: EMI RECEPTACLE ASSEMBLY, 36 POSITION, LOW PROFILE, SHIELDED, CHAMP LATCH

SIZE A1 CAGE CODE 00779 DRAWING NO C–5554348 RESTRICTED TO –

CUSTOMER DRAWING SCALE 2:1 SHEET 1 OF 1 REV C

AMP 4805 REV 31MAR2000

Downloaded from Elcodis.com electronic components distributor