THIS DRAWING IS UNPUBLISHED. RELEASED FOR PUBLICATION -.-- -
© COPYRIGHT — BY TYCO ELECTRONICS CORPORATION. ALL RIGHTS RESERVED.

LOC	DIST
GP	00

REVISIONS

P	LTR	DESCRIPTION	DATE	DRN	APVD
	B	REVISED PER ECO-08-007327	09APR08	BM	WM

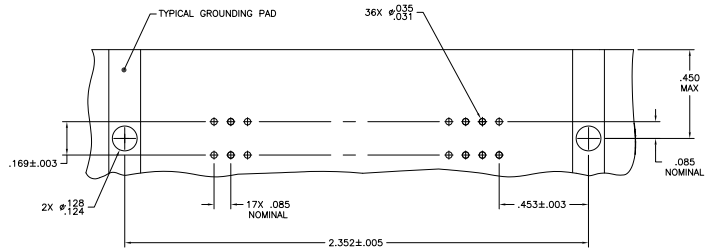

SUGGESTED PRINTED CIRCUIT BOARD MOUNTING DIMENSIONS

1. MATERIAL:
HOUSING, RIGHT ANGLE BRACKET, ADAPTER COMB & TERMINAL SUPPORT PLATE – THERMOPLASTIC, BLACK.
RECEPTACLE SHIELD – BRIGHT NICKEL OVER COPPER PLATED DIE CASTING.
TERMINALS – HIGH STRENGTH COPPER ALLOY PLATED WITH EITHER .000030 MIN GOLD PLATE OR GOLD FLASH OVER PALLADIUM NICKEL PLATE, .000030 MIN TOTAL ON MATING SURFACE. .000120 MIN TIN PLATE ON TAILS. ALL OVER .000050 MIN NICKEL UNDERPLATE OVER ENTIRE TERMINAL.
GROUND BRACKET – TIN PLATED CARBON STEEL.
BAIL CLIPS – PASSIVATED STAINLESS STEEL.

2. THE CONTACT SURFACES OF THE TERMINALS ARE COATED WITH LUBRICANT.

3. CENTER TO CENTER SPACING OF TERMINALS IS .085 NOMINAL.

4. ALL DIMENSIONS ARE MAXIMUM UNLESS OTHERWISE SPECIFIED.

5. TERMINAL 1 IS LOCATED IN THIS ROW FOR STANDARD ORIENTAION, SEE DETAIL A.

6. IF TERMINALS DO NOT EXTEND BELOW COMB, THEN COMB SHALL BE PARTIALLY RETRACTED, BEFORE INSERTING CONNECTOR INTO THE PC BOARD.

7. ACCEPTS 4–40 SCREW–STAINLESS STEEL RECOMMENDED FOR CONTACT WITH SOLDER BATH.

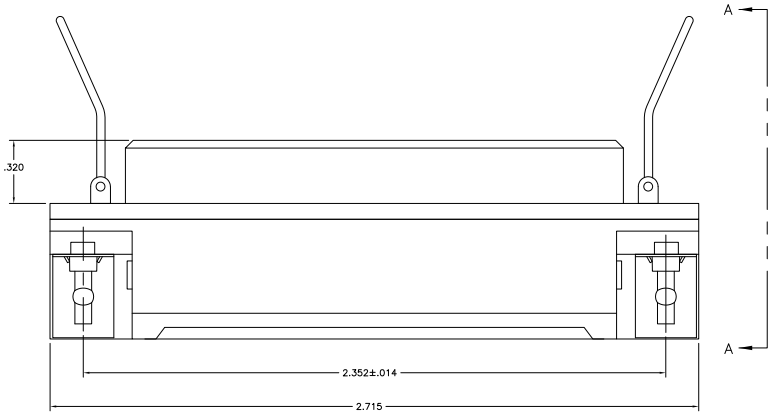

TOP VIEW

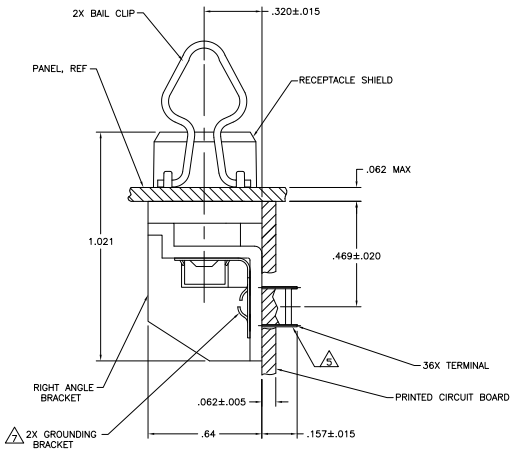

SIDE VIEW A–A

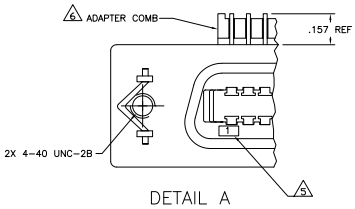

DETAIL A
(FRONT VIEW)
STANDARD ORIENTATION

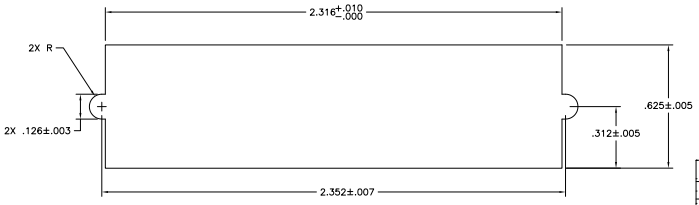

SUGGESTED REAR PANEL MOUNTING CUTOUT DIMENSIONS

5555233–1
PART NUMBER

THIS DRAWING IS A CONTROLLED DOCUMENT.

DIMENSIONS: INCHES

TOLERANCE UNLESS OTHERWISE SPECIFIED: 0 PLC ± – ; 1 PLC ± – ; 2 PLC ± – ; 3 PLC ± – ; 4 PLC ± – ; ANGLES ± –

MATERIAL 1 FINISH 1

DRN B. MCMASTER 24AUG05
CHK W. MILLHIMES 24AUG05
APVD W. MILLHIMES 24AUG05
PRODUCT SPEC —
APPLICATION SPEC —
WEIGHT —

Tyco Electronics — Tyco Electronics Corporation, Harrisburg, PA 17105–3608

NAME: RECEPTACLE ASSEMBLY, SHIELDED, 36 POSITION, RIGHT ANGLE, W/ GROUND BRACKET & BAIL LOCK, FLUSH MOUNTING, CHAMP

SIZE	CAGE CODE	DRAWING NO	RESTRICTED TO
A1	00779	C–5555233	—

CUSTOMER DRAWING — SCALE 4:1 — SHEET 1 OF 1 — REV B

AMP 4805 REV 31MAR2000

Downloaded from Elcodis.com electronic components distributor