THIS DRAWING IS UNPUBLISHED. RELEASED FOR PUBLICATION AUG ,2004.
© COPYRIGHT 2004 BY TYCO ELECTRONICS CORPORATION. ALL RIGHTS RESERVED.

LOC	DIST
ES	00

REVISIONS

P	LTR	DESCRIPTION	DATE	DWN	APVD
	A	REVISED ECR-08-014638	10JUN08	AZ	SY

1 NUMBER "n" IS COUNTED FROM DATUM
(CIRCUIT NO.1 IS "AMP" MARK SIDE.)

2 MATERIA: HOUSING, 66 NYLON (GF) UL 94V-0, BLACK.
: CONTACT, PHOSPHOR BRONZE.
: RETENTION LEG; BRASS.

3 FINISH: CONTACT; Au AT CONTACT AREA (SEE TABLE), TIN AT TINE, OVER Ni.
RETENTION LEG; TIN UNDER Ni.

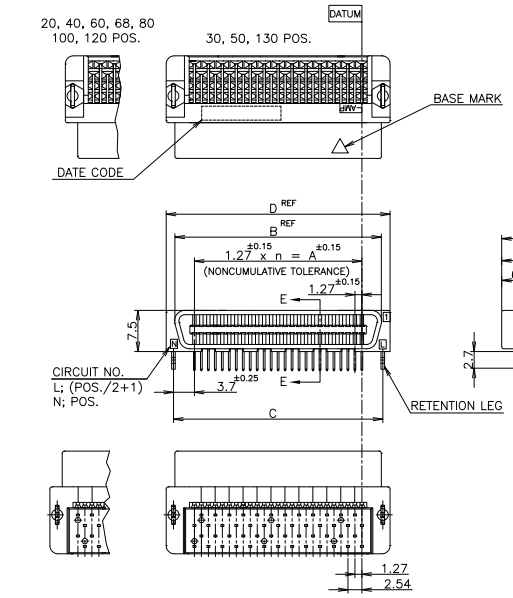

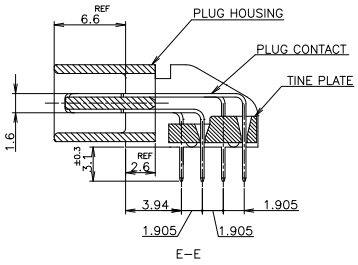

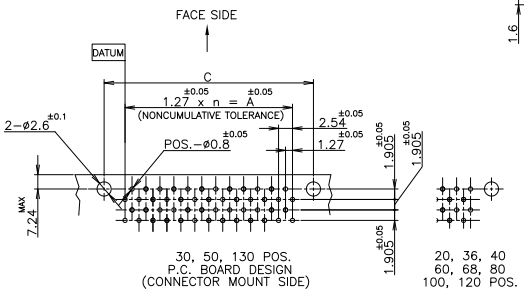

6-	-2		130	64	81.28	89.62	88.68	92.48
6-	-1		120	59	74.93	83.27	82.33	86.13
6-	-0		100	49	62.23	70.57	69.63	73.43
5-	-9		80	39	49.53	57.87	56.93	60.73
5-	-8		68	33	41.91	50.25	49.31	53.11
5-	-7		60	29	36.83	45.17	44.23	48.03
5-	-6		50	24	30.48	38.82	37.88	41.68
5-	-5		40	19	24.13	32.47	31.53	35.33
5-	-4		36	17	21.59	29.93	28.99	32.79
5-	-3		30	14	17.78	26.12	25.18	28.98
5-	-1	0.00076	20	9	11.43	19.77	18.83	22.63
4-	-2		130	64	81.28	89.62	88.68	92.48
4-	-1		120	59	74.93	83.27	82.33	86.13
4-	-0		100	49	62.23	70.57	69.63	73.43
3-	-9		80	39	49.53	57.87	56.93	60.73
3-	-8		68	33	41.91	50.25	49.31	53.11
3-	-7		60	29	36.83	45.17	44.23	48.03
3-	-6		50	24	30.48	38.82	37.88	41.68
3-	-5		40	19	24.13	32.47	31.53	35.33
3-	-4		36	17	21.59	29.93	28.99	32.79
3-	-3		30	14	17.78	26.12	25.18	28.98
3-	-1	0.0005	20	9	11.43	19.77	18.83	22.63
1-	-2		130	64	81.28	89.62	88.68	92.48
1-	-1		120	59	74.93	83.27	82.33	86.13
1-	-0		100	49	62.23	70.57	69.63	73.43
	-9		80	39	49.53	57.87	56.93	60.73
	-8		68	33	41.91	50.25	49.31	53.11
	-7		60	29	36.83	45.17	44.23	48.03
	-6		50	24	30.48	38.82	37.88	41.68
	-5		40	19	24.13	32.47	31.53	35.33
	-4		36	17	21.59	29.93	28.99	32.79
	-3		30	14	17.78	26.12	25.18	28.98
5175472-1		0.0002	20	9	11.43	19.77	18.83	22.63
PART NO.		Au PLATE	POS.	n	A	B	C	D

5175472

LEAD FREE

THIS DRAWING IS A CONTROLLED DOCUMENT.

DIMENSIONS: MM

TOLERANCES UNLESS OTHERWISE SPECIFIED:
0 PLC ±
1 PLC ± -
2 PLC ± -
3 PLC ± -
4 PLC ± -
ANGLES ± -

GENERAL TOLERANCE
10 ≥ : ±0.2
30 ≥ > 10: ±0.25
100 ≥ > 30: ±0.3
ANGLES: ±3'

MATERIAL 2
FINISH 3

DWN Julyee Zhu 18AUG2004
CHK Steven Yao 18AUG2004
APVD Ikuo Enomoto 18AUG2004
PRODUCT SPEC 108-60038
APPLICATION SPEC
WEIGHT —
CUSTOMER DRAWING

Tyco Electronics
Tyco Electronics AMP K.K.
Kawasaki,Japan

NAME
AMP CHAMP .050 CONNECTOR (B-T-B)
PLUG CONNECTOR
(HORIZONTAL WITH RETENTION LEG)

SIZE	CAGE CODE	DRAWING NO	RESTRICTED TO
A2	00779	C-5175472	

SCALE NTS SHEET 1 OF 1 REV A

AMP 1471-9 REV 31MAR2000

Downloaded from Elcodis.com electronic components distributor