THIS DRAWING IS UNPUBLISHED. RELEASED FOR PUBLICATION OCT ,1988.
© COPYRIGHT 1988 BY TYCO ELECTRONICS CORPORATION, ALL RIGHTS RESERVED.

LOC	DIST
ES	00

REVISIONS

P	LTR	DESCRIPTION	DATE	DWN	APVD
	A	REVISED ECR-08-014638	10JUN08	AZ	SY

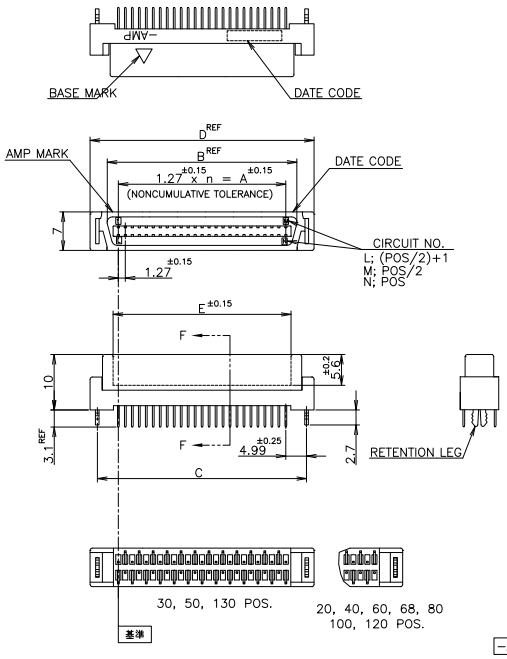

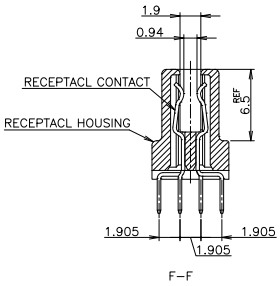

1 NUMBER "n" IS COUNTED FROM DATUM (CIRCUIT NO.1 IS "AMP" MARK SIDE.)
2 MATERIAL: HOUSING, 66 NYLON (GF) UL 94V-0, BLACK.
: CONTACT, PHOSPHOR BRONZE.
: RETENTION LEG; BRASS.
3 FINISH: CONTACT; Au AT CONTACT AREA (SEE TABLE), TIN AT TINE, OVER Ni.
RETENTION LEG; TIN UNDER Ni.
4 P.C. BOARD THK MUST BE 1.6 +0.15 -0.1 FOR CARD EDGE CONNECTOR

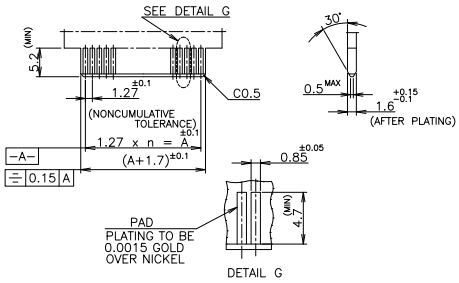

RECOMMENDED P.C. BOARD DIMMENSIONS. 4

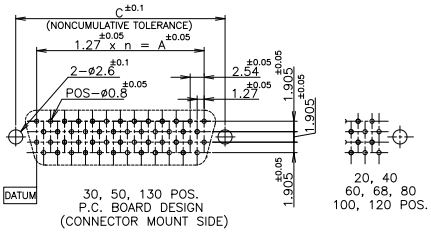

6-	-2			130	64	81.28	86.82	91.25	93.90	83.18
6-	-1			120	59	74.93	80.47	84.90	87.55	76.83
6-	-0			100	49	62.23	67.77	72.20	74.85	64.13
5-	-9			80	39	49.53	55.07	59.50	62.15	51.43
5-	-8			68	33	41.91	47.45	51.88	54.53	43.81
5-	-7			60	29	36.83	42.37	46.80	49.45	38.73
5-	-6			50	24	30.48	36.02	40.45	43.10	32.38
5-	-5			40	19	24.13	29.67	34.10	36.75	26.03
5-	-3			30	14	17.78	23.32	27.75	30.40	19.68
5-	-1	0.00076		20	9	11.43	16.97	21.40	24.05	13.33
4-	-2			130	64	81.28	86.82	91.25	93.90	83.18
4-	-1			120	59	74.93	80.47	84.90	87.55	76.83
4-	-0			100	49	62.23	67.77	72.20	74.85	64.13
3-	-9			80	39	49.53	55.07	59.50	62.15	51.43
3-	-8			68	33	41.91	47.45	51.88	54.53	43.81
3-	-7			60	29	36.83	42.37	46.80	49.45	38.73
3-	-6			50	24	30.48	36.02	40.45	43.10	32.38
3-	-5			40	19	24.13	29.67	34.10	36.75	26.03
3-	-3			30	14	17.78	23.32	27.75	30.40	19.68
3-	-1	0.0005		20	9	11.43	16.97	21.40	24.05	13.33
1-	-2			130	64	81.28	86.82	91.25	93.90	83.18
1-	-1			120	59	74.93	80.47	84.90	87.55	76.83
1-	-0			100	49	62.23	67.77	72.20	74.85	64.13
	-9			80	39	49.53	55.07	59.50	62.15	51.43
	-8			68	33	41.91	47.45	51.88	54.53	43.81
	-7			60	29	36.83	42.37	46.80	49.45	38.73
	-6			50	24	30.48	36.02	40.45	43.10	32.38
	-5			40	19	24.13	29.67	34.10	36.75	26.03
	-3			30	14	17.78	23.32	27.75	30.40	19.68
5175475-1		0.0002		20	9	11.43	16.97	21.40	24.05	13.33
PART NO.		Au PLATE		POS.	n	A	B	C	D	E

5175475

THIS DRAWING IS A CONTROLLED DOCUMENT.

DIMENSIONS: MM

TOLERANCES UNLESS OTHERWISE SPECIFIED:
0 PLC ±
1 PLC ± -
2 PLC ± -
3 PLC ± -
4 PLC ± -
ANGLES ± -

GENERAL TOLERANCE
10 ≥ : ±0.2
30 ≥ > 10: ±0.25
100 ≥ > 30: ±0.3
ANGLES: ±3°

MATERIAL 2
FINISH 3

DWN Julyee Zhu 20AUG2004
CHK Steven Yao 20AUG2004
APVD Ikuo Enomoto 20AUG2004
PRODUCT SPEC 108-60038
APPLICATION SPEC
WEIGHT —
CUSTOMER DRAWING

Tyco Electronics
Tyco Electronics AMP K.K.
Kawasaki,Japan

NAME
AMP CHAMP .050 CONNECTOR (B-T-B)
RECEPTACLE CONNECTOR
(VERTICAL WITH RETENTION LEG)

SIZE	CAGE CODE	DRAWING NO	RESTRICTED TO
A2	00779	C-5175475	

SCALE	SHEET	REV
NTS	1 OF 1	A

LEAD FREE

AMP 1471-9 REV 31MAR2000

Downloaded from Elcodis.com electronic components distributor