THIS DRAWING IS UNPUBLISHED. RELEASED FOR PUBLICATION -.-.-
© COPYRIGHT - BY TYCO ELECTRONICS CORPORATION. ALL RIGHTS RESERVED.

LOC	DIST
GP	00

REVISIONS

P	LTR	DESCRIPTION	DATE	DRN	APVD
	B	REVISED PER ECO-08-007327	17APR08	BM	WM

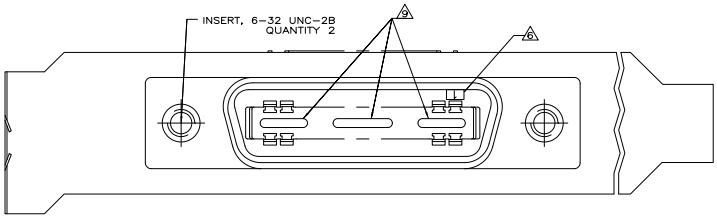

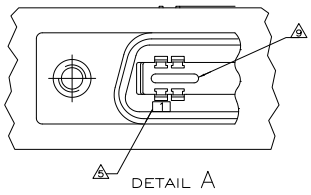

1. MATERIAL:
   SUPPORT PLATE, HOUSING & ADAPTER COMB – POLYESTER, BLACK.
   RECEPTACLE SHIELD – NICKEL OVER COPPER PLATED ZINC.
   TERMINALS – HIGH STRENGTH COPPER ALLOY PLATED WITH EITHER 0.76μm [.000030] MIN GOLD PLATE OR GOLD FLASH OVER PALLADIUM NICKEL PLATE, 0.76μm [.000030] MIN TOTAL ON MATING SURFACE. 3.05μm [.000120] MIN TIN PLATE ON TAILS. ALL OVER 1.27μm [.000050] MIN NICKEL UNDERPLATE OVER ENTIRE TERMINAL.
   GROUND BRACKET – ZINC PLATED CARBON STEEL.
2. THE CONTACT SURFACES OF THE TERMINALS ARE COATED WITH LUBRICANT.
3. CENTER-TO-CENTER SPACING OF TERMINALS IS 2.16 [.085] NOMINAL.
4. DIMENSIONS ARE MAXIMUM UNLESS OTHERWISE SPECIFIED.
5. TERMINAL 1 LOCATED IN THIS ROW FOR STANDARD ORIENTATION.
6. TERMINAL 1 LOCATED IN THIS ROW FOR REVERSE ORIENTATION.
7. SHIELD SHIPPED NOT ASSEMBLED.
8. ADAPTER COMB SHALL BE PARTIALLY RETRACTED BEFORE INSERTING CONNECTOR INTO PRINTED CIRCUIT BOARD.
9. THIS FEATURE IS A CORED AREA AND IS OPTIONAL ON PART.
10. CONNECTOR MATING FACE MAY VARY UP TO 5 DEGREES IN EITHER DIRECTION FROM NOMINAL.

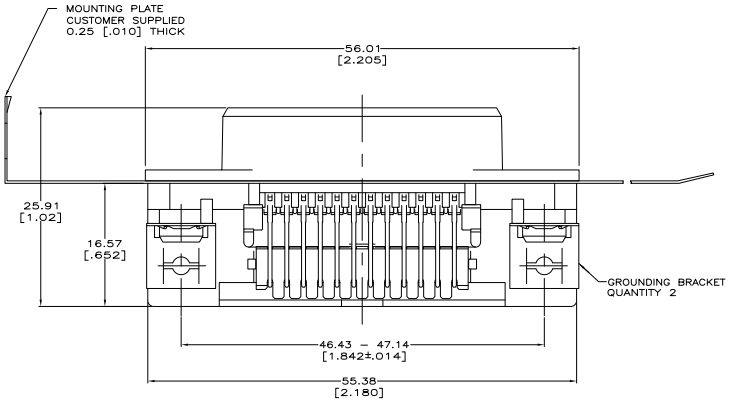

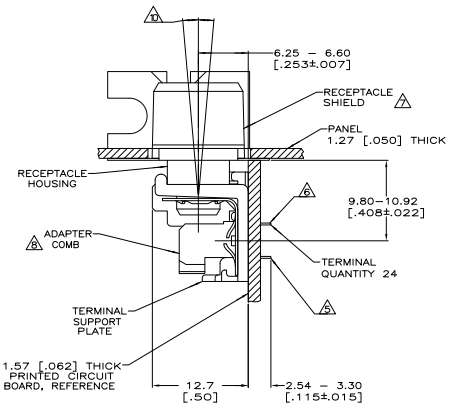

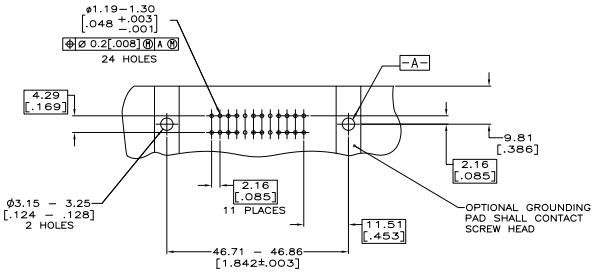

SUGGESTED PRINTED CIRCUIT BOARD MOUNTING DIMENSIONS
SCALE 2:1

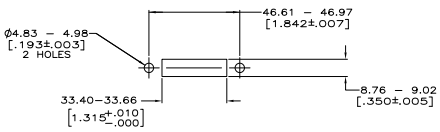

SUGGESTED BRACKET MOUNTING CUTOUT DIMENSIONS
SCALE 1:1

SEE DETAIL "A"	STANDARD	5555139-2
AS SHOWN	REVERSE	5555139-1
DESCRIPTION	ORIENTATION	PART NUMBER

THIS DRAWING IS A CONTROLLED DOCUMENT.

DRN B. MCMASTER 24AUG05
CHK W. MILLHIMES 24AUG05
APVD W. MILLHIMES 24AUG05

DIMENSIONS: mm [INCHES]
TOLERANCE UNLESS OTHERWISE SPECIFIED: 0 PLC ± – ; 1 PLC ± – ; 2 PLC ± – ; 3 PLC ± – ; 4 PLC ± – ; ANGLES ± –

MATERIAL 1
FINISH 1

PRODUCT SPEC –
APPLICATION SPEC –
WEIGHT –

Tyco Electronics
Tyco Electronics Corporation
Harrisburg, Pa 17105-3608

NAME
RECEPTACLE ASSEMBLY, 24 POSITION, RIGHT ANGLE, SHIELDED, LOW PROFILE, WITH GROUNDING BRACKET, CHAMP

SIZE A1 | CAGE CODE 00779 | DRAWING NO C-5555139 | RESTRICTED TO –

CUSTOMER DRAWING | SCALE 4:1 | SHEET 1 OF 1 | REV B

AMP 4805 REV 31MAR2000

Downloaded from Elcodis.com electronic components distributor