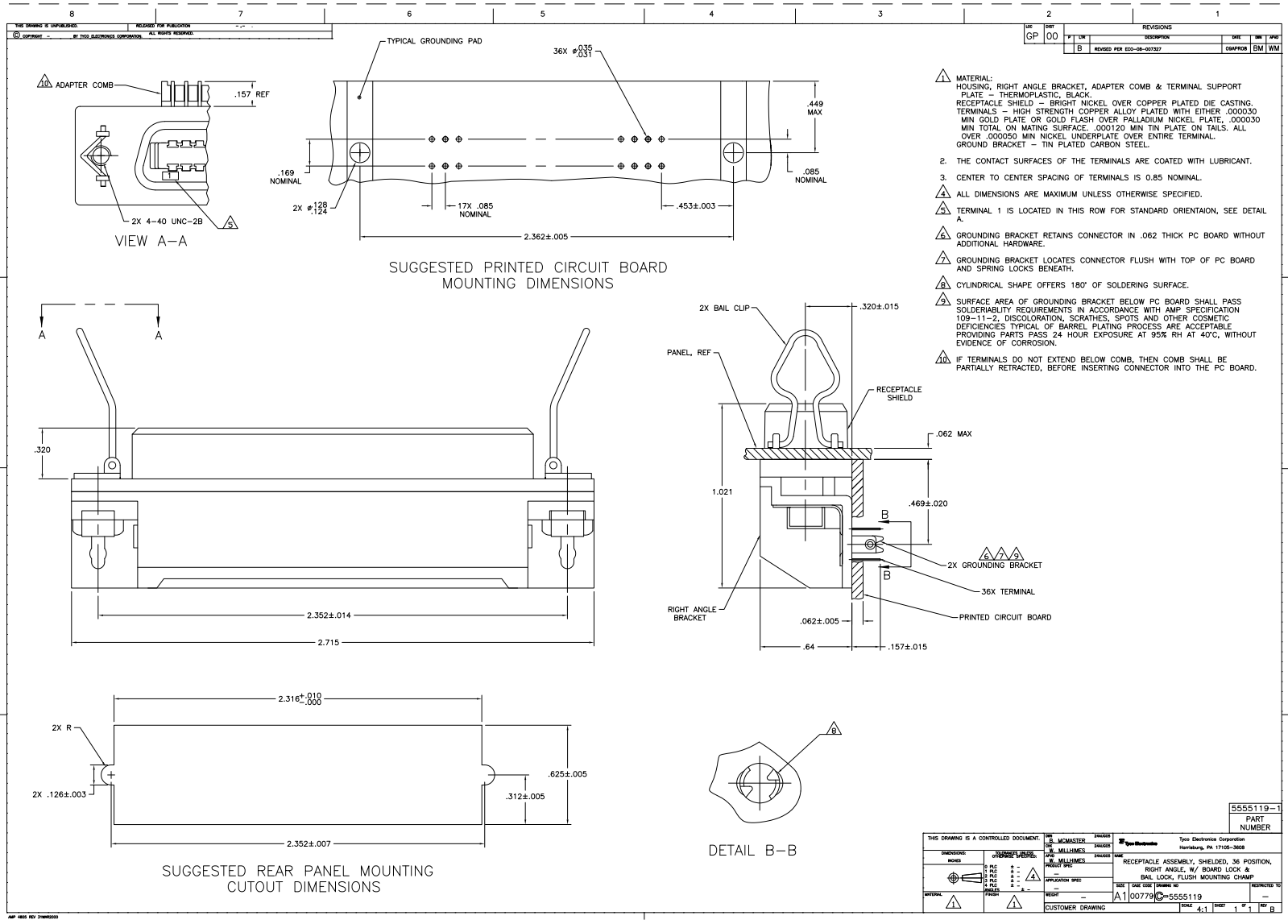

1. MATERIAL:
HOUSING, RIGHT ANGLE BRACKET, ADAPTER COMB & TERMINAL SUPPORT PLATE – THERMOPLASTIC, BLACK.
RECEPTACLE SHIELD – BRIGHT NICKEL OVER COPPER PLATED DIE CASTING.
TERMINALS – HIGH STRENGTH COPPER ALLOY PLATED WITH EITHER .000030 MIN GOLD PLATE OR GOLD FLASH OVER PALLADIUM NICKEL PLATE, .000030 MIN TOTAL ON MATING SURFACE. .000120 MIN TIN PLATE ON TAILS. ALL OVER .000050 MIN NICKEL UNDERPLATE OVER ENTIRE TERMINAL.
GROUND BRACKET – TIN PLATED CARBON STEEL.

2. THE CONTACT SURFACES OF THE TERMINALS ARE COATED WITH LUBRICANT.

3. CENTER TO CENTER SPACING OF TERMINALS IS 0.85 NOMINAL.

4. ALL DIMENSIONS ARE MAXIMUM UNLESS OTHERWISE SPECIFIED.

5. TERMINAL 1 IS LOCATED IN THIS ROW FOR STANDARD ORIENTAION, SEE DETAIL A.

6. GROUNDING BRACKET RETAINS CONNECTOR IN .062 THICK PC BOARD WITHOUT ADDITIONAL HARDWARE.

7. GROUNDING BRACKET LOCATES CONNECTOR FLUSH WITH TOP OF PC BOARD AND SPRING LOCKS BENEATH.

8. CYLINDRICAL SHAPE OFFERS 180° OF SOLDERING SURFACE.

9. SURFACE AREA OF GROUNDING BRACKET BELOW PC BOARD SHALL PASS SOLDERIABLITY REQUIREMENTS IN ACCORDANCE WITH AMP SPECIFICATION 109-11-2, DISCOLORATION, SCRATHES, SPOTS AND OTHER COSMETIC DEFICIENCIES TYPICAL OF BARREL PLATING PROCESS ARE ACCEPTABLE PROVIDING PARTS PASS 24 HOUR EXPOSURE AT 95% RH AT 40°C, WITHOUT EVIDENCE OF CORROSION.

10. IF TERMINALS DO NOT EXTEND BELOW COMB, THEN COMB SHALL BE PARTIALLY RETRACTED, BEFORE INSERTING CONNECTOR INTO THE PC BOARD.

Downloaded from Elcodis.com electronic components distributor