THIS DRAWING IS UNPUBLISHED. RELEASED FOR PUBLICATION -.-.-
© COPYRIGHT - - BY TYCO ELECTRONICS CORPORATION. ALL RIGHTS RESERVED.

LOC	DIST
GP	00

REVISIONS

P	LTR	DESCRIPTION	DATE	DWN	APVD
-	H	REVISED PER EC 0513-0026-04	29MAR04	BM	JG

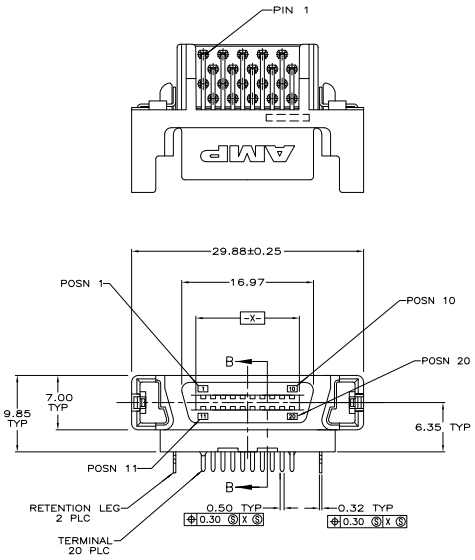

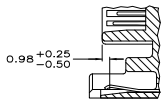

SECTION C–C

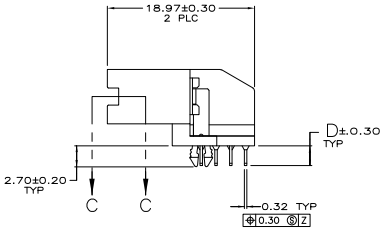

1. HOUSING AND TINE PLATE: LCP, BLACK, UL 94V-0 RATED.
   TERMINALS: PHOSPHOR BRONZE.
   RETENTION LEGS: BRASS.
2. TERMINALS: 0.76μm MIN GOLD FOR A LENGTH 1.20 MIN STARTING 0.50 MAX FROM MATING END, 3.81μm MIN TIN–LEAD FOR A LENGTH OF 3.40 MIN FROM OPPOSITE END, BOTH OVER 1.27μm MIN NICKEL.
   RETENTION LEGS: 3.81μm MIN TIN–LEAD OVER 1.27μm MIN NICKEL.
3. CONNECTOR WILL ACCOMMODATE MATING PRINTED CIRCUIT BOARD OF 1.60±0.07.
4. CONTACTS 1–10,15,16 ARE POSITIONED AWAY FROM MATING FACE (SECOND MATE).
5. CONTACTS 11–14 AND 17–20 ARE POSITIONED TOWARD MATING FACE (FIRST MATE).
6. TERMINALS: 0.76μm MIN GOLD FOR A LENGTH 1.20 MIN STARTING 0.50 MAX FROM MATING END, 3.81μm MIN TIN FOR A LENGTH OF 3.40 MIN FROM OPPOSITE END, BOTH OVER 1.27μm MIN NICKEL.
   RETENTION LEGS: 3.81μm MIN TIN OVER 1.27μm MIN NICKEL.

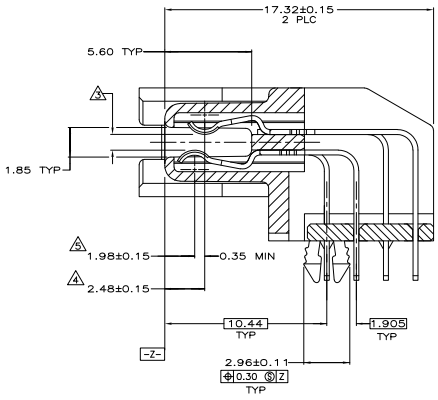

SECTION B–B
SCALE 8:1

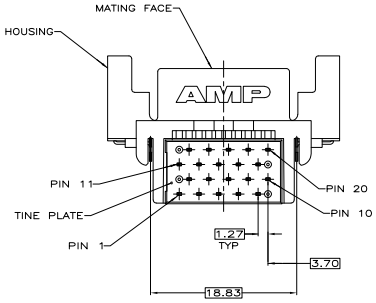

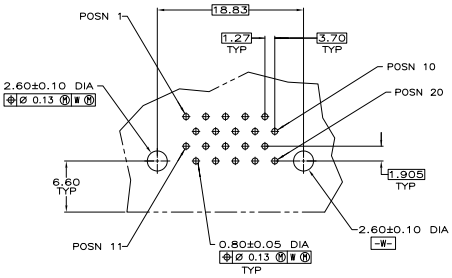

RECOMMENDED PC BOARD
MOUNTING DIMENSIONS
COMPONENT SIDE

YES	6	3.05	787653-4
YES	6	2.54	787653-3
NO	2	3.05	787653-2
NO	2	2.54	787653-1
LEAD FREE	FINISH	D	PART NUMBER

THIS DRAWING IS A CONTROLLED DOCUMENT.

DIMENSIONS: mm

TOLERANCE UNLESS OTHERWISE SPECIFIED:
0 PLC ± –
1 PLC ± –
2 PLC ± 0.10
3 PLC ± –
4 PLC ± –
ANGLES ± –

MATERIAL: 1.
FINISH: SEE TABLE

DR B. MCMASTER 29MAR04
DE S. SHUEY 29MAR04
APD B. MCMASTER 29MAR04

PRODUCT SPEC 108-1548
APPLICATION SPEC 114-6061
WEIGHT –

Tyco Electronics Corporation
Harrisburg, Pa 17105-3608

NAME: RECEPTACLE ASSEMBLY, RIGHT ANGLE, 20 POSITION, BOARD TO BOARD, .050, SERIES I, CHAMP BLINDMATE

SIZE A1 CAGE CODE 00779 DRAWING NO C-787653 RESTRICTED TO –

CUSTOMER DRAWING SCALE 4:1 SHEET 1 OF 1 REV H

AMP 4805 REV 31MAR2000

Downloaded from Elcodis.com electronic components distributor