THIS DRAWING IS UNPUBLISHED. RELEASED FOR PUBLICATION -.-.-
© COPYRIGHT - - BY TYCO ELECTRONICS CORPORATION. ALL RIGHTS RESERVED.

UOC	DIST
GP	00

REVISIONS

P	LTR	DESCRIPTION	DATE	DRN	APVD
	C	REVISED PER ECO-08-007327	08APR08	BM	WM

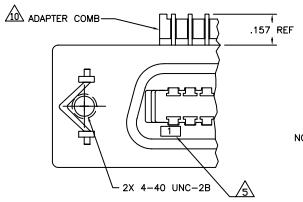

VIEW A–A

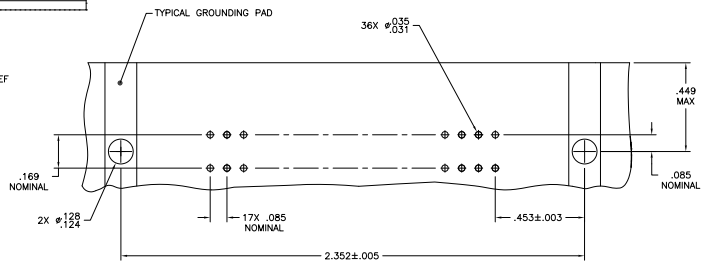

SUGGESTED PRINTED CIRCUIT BOARD MOUNTING DIMENSIONS

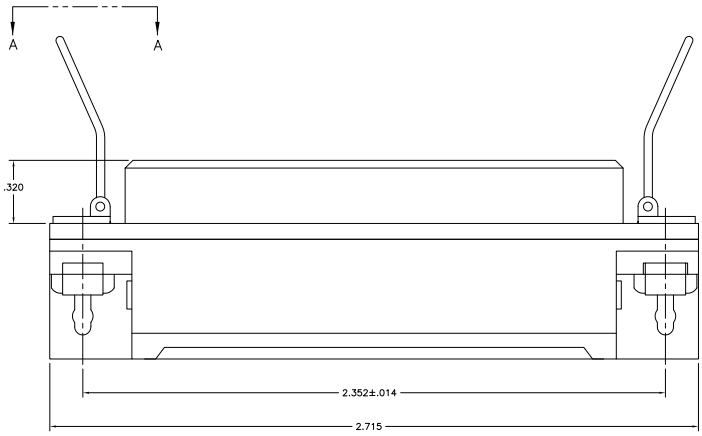

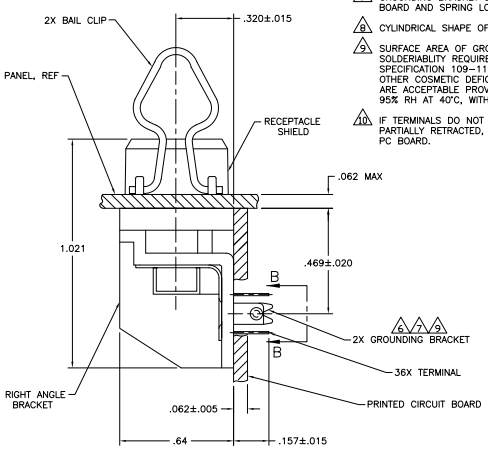

1. MATERIAL/FINISH
HOUSING, RIGHT ANGLE BRACKET, ADAPTER COMB AND TERMINAL SUPPORT PLATE: THERMOPLASTIC, BLACK.
RECEPTACLE SHIELD: BRIGHT NICKEL OVER COPPER PLATED DIE CASTING.
TERMINALS: HIGH STRENGTH COPPER ALLOY PLATED WITH EITHER .000030 MIN GOLD PLATE OR GOLD FLASH OVER PALLADIUM NICKEL PLATE, .000030 MIN TOTAL ON MATING SURFACE. .000120 MIN TIN–LEAD PLATE ON TAILS. ALL OVER .000050 MIN NICKEL UNDERPLATE OVER ENTIRE TERMINAL.
GROUND BRACKET: TIN–LEAD PLATED CARBON STEEL.
BAIL CLIPS: PASSIVATED STAINLESS STEEL.
SHIELD: BRIGHT NICKEL OVER COPPER PLATED ZINC.

2. THE CONTACT SURFACES OF THE TERMINALS ARE COATED WITH LUBRICANT.

3. CENTER TO CENTER SPACING OF TERMINALS IS .085 NOMINAL.

4. ALL DIMENSIONS ARE MAXIMUM UNLESS OTHERWISE SPECIFIED.

5. TERMINAL 1 IS LOCATED IN THIS ROW FOR STANDARD ORIENTAION, SEE DETAIL A.

6. GROUNDING BRACKET RETAINS CONNECTOR IN .062 THICK PC BOARD WITHOUT ADDITIONAL HARDWARE.

7. GROUNDING BRACKET LOCATES CONNECTOR FLUSH WITH TOP OF PC BOARD AND SPRING LOCKS BENEATH.

8. CYLINDRICAL SHAPE OFFERS 180° OF SOLDERING SURFACE.

9. SURFACE AREA OF GROUNDING BRACKET BELOW PC BOARD SHALL PASS SOLDERIABLITY REQUIREMENTS IN ACCORDANCE WITH AMP SPECIFICATION 109–11–2. DISCOLORATION, SCRATHES, SPOTS AND OTHER COSMETIC DEFICIENCIES TYPICAL OF BARREL PLATING PROCESS ARE ACCEPTABLE PROVIDING PARTS PASS 24 HOUR EXPOSURE AT 95% RH AT 40°C, WITHOUT EVIDENCE OF CORROSION.

10. IF TERMINALS DO NOT EXTEND BELOW COMB, THEN COMB SHALL BE PARTIALLY RETRACTED, BEFORE INSERTING CONNECTOR INTO THE PC BOARD.

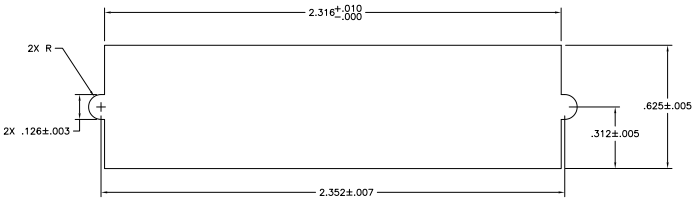

SUGGESTED REAR PANEL MOUNTING CUTOUT DIMENSIONS

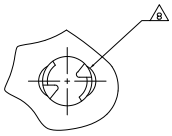

DETAIL B–B

555119–1
PART NUMBER

THIS DRAWING IS A CONTROLLED DOCUMENT.	TITLE 2 REAM 2/APR/07	Tyco Electronics	Tyco Electronics Corporation Harrisburg, PA 17105-3608
DIMENSIONS: INCHES	DIE W. MILLHIMES 2/APR/07		
TOLERANCE UNLESS OTHERWISE SPECIFIED: 6 PLC ± – 5 PLC ± – 3 PLC ± – 2 PLC ± – 4 PLC ± – ANGLES ± – 4	APVD W. MILLHIMES 2/APR/07	NAME	RECEPTACLE ASSEMBLY, SHIELDED, 36 POSITION, RIGHT ANGLE, W/ BOARD LOCK & BAIL LOCK, FLUSH MOUNTING CHAMP
	PRODUCT SPEC —		
	APPLICATION SPEC —	SIZE A1 / CAGE CODE 00779 / DRAWING NO C-555119	RESTRICTED TO —
MATERIAL 1	FINISH 1	WEIGHT —	
		CUSTOMER DRAWING	SCALE 4:1 / SHEET 1 OF 1 / REV C

AMP 4805 REV 31MR2000

Downloaded from Elcodis.com electronic components distributor