THIS DRAWING IS UNPUBLISHED. RELEASED FOR PUBLICATION .19 .
© COPYRIGHT 19 BY AMP INCORPORATED. ALL RIGHTS RESERVED.

LOC	DIST	REVISIONS				
AA	20	LTR	DESCRIPTION	DATE	DWN	APVD
		D	ADDED: -2 PER EC 0515-0073-01	28SEP01	DLD	DMW

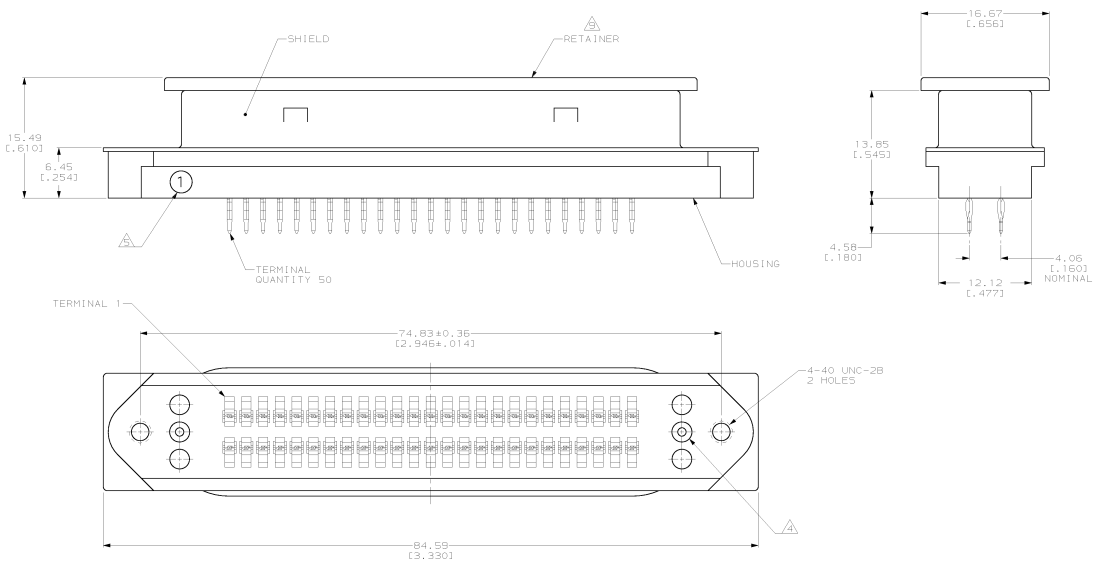

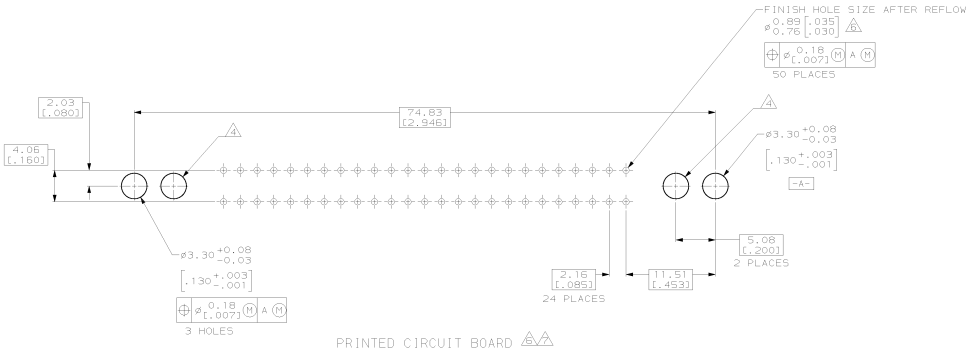

PRINTED CIRCUIT BOARD
MOUNTING DIMENSIONS

1. DIMENSIONS ARE MAXIMUM UNLESS OTHERWISE SPECIFIED.
2. MATERIAL: HOUSING - POLYESTER, BLACK.
   TERMINAL - COPPER ALLOY PLATED WITH 0.76µm [.000030] MINIMUM GOLD ON MATING SURFACE AND:
   557984-1 - 0.13µm [.000005] MINIMUM GOLD ON ACTION PIN AREA
   557984-2 - 2.54µm [.000100] MINIMUM TIN-LEAD ON ACTION PIN AREA
   OVER 1.27µm[.000050] MINIMUM NICKEL UNDERPLATE OVER ENTIRE TERMINAL.
   RETAINER - POLYETHYLENE, NATURAL.
   SHIELD - CARBON STEEL, PLATED BRIGHT NICKEL 5.08µm[.000200] MINIMUM.
3. THE CONTACT SURFACES OF THE TERMINALS ARE COATED WITH LUBRICANT.
4. OPTIONAL MOUNTING HOLE FOR SELF-TAPPING SCREW.
5. "1" ON HOUSING INDICATES LOCATION OF TERMINAL 1.
6. ALL PLATED-THRU HOLES SHALL BE PER AMP SPEC 115-6072.
7. 50 LBS. MINIMUM FORCE REQUIRED TO UNSEAT CONNECTOR FROM PRINTED CIRCUIT BOARD WITHOUT USE OF HARDWARE.
8. CENTER-TO-CENTER SPACING OF TERMINALS IS 2.16[.085] NOMINAL.
9. RETAINER MUST REMAIN INSTALLED UNTIL AFTER CONNECTOR HAS BEEN INSERTED INTO PCB HOLES.

TIN-LEAD	557984-2
GOLD	557984-1
ACTION PIN PLATING	PART NUMBER

THIS DRAWING IS A CONTROLLED DOCUMENT.

DIMENSIONS: mm[INCHES]
TOLERANCES UNLESS OTHERWISE SPECIFIED: 0 PLC ±- 1 PLC ±- 2 PLC ±- 3 PLC ±- 4 PLC ±- ANGLES ±-
MATERIAL
FINISH

DWN JOEL H. WOOTEN 4-13-93
CHK C. WHITT 4-22-93
APVD R. FLAHERTY 4-29-93
PRODUCT SPEC 108-6019
APPLICATION SPEC 114-6027
WEIGHT -
CUSTOMER DRAWING

AMP TYCO Electronics Harrisburg, PA 17105-3608

NAME RECEPTACLE ASSEMBLY, 50 POSITION, SHIELDED, ACTION PIN, CHAMP

SIZE A1 | CAGE CODE 00779 | DRAWING NO C-557984 | RESTRICTED TO -
SCALE 4:1 | SHEET 1 OF 1 | REV D

AMP 4805 REV 11.XM97
06-DEC-01 10:04:58 amp36051 /home/amp36051/admmod

Downloaded from Elcodis.com electronic components distributor