THIS DRAWING IS UNPUBLISHED. RELEASED FOR PUBLICATION -.-.-
© COPYRIGHT - By -. ALL RIGHTS RESERVED.

LOC	DIST
GP	00

REVISIONS

P	LTR	DESCRIPTION	DATE	DRN	APVD
	N3	REVISED PER ECO-11-005033	23MAR11	RK	HMR

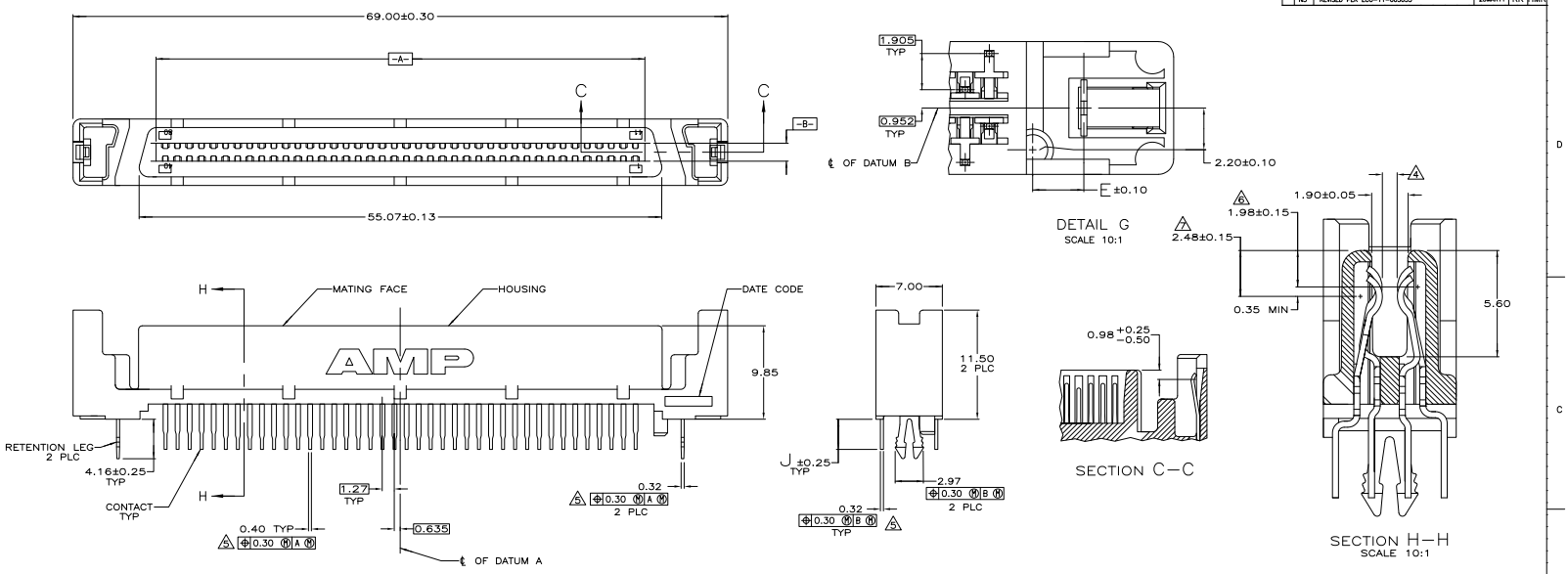

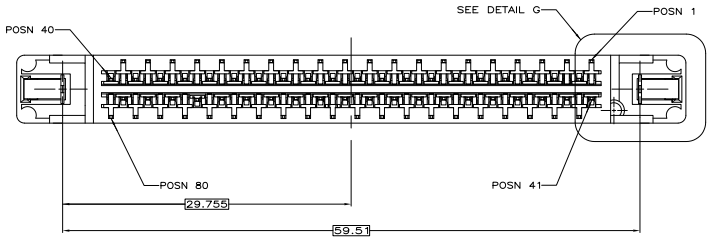

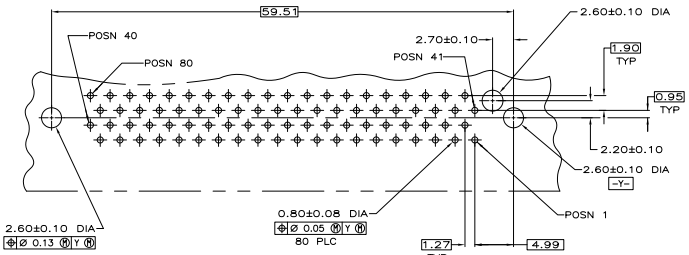

RECOMMENDED PC BOARD MOUNTING DIMENSIONS COMPONENT SIDE
SCALE 4:1

1. HOUSING: LCP, UL 94V-0 RATED, BLACK.
   CONTACTS: PHOSPHOR BRONZE.
   RETENTION LEG: BRASS.
2. CONTACTS: 0.76µm GOLD FOR A LENGTH 1.20 MIN STARTING 0.50 MAX FROM MATING END, 3.81µm MIN TIN-LEAD FOR A LENGTH OF 3.43 MIN FROM OPPOSITE END, BOTH OVER 1.27µm MIN NICKEL.
3. RETENTION LEG: 3.81µm MIN TIN-LEAD OVER 1.27µm MIN NICKEL.
4. CONNECTOR WILL ACCOMMODATE MATING PRINTED CIRCUIT BOARD OF 1.60±0.07 THICKNESS.
5. POSITION TOLERANCE APPLIES AT CONTACT TIP ONLY.
6. CONTACTS 1, 36 THRU 40, 41 THRU 43, 45, 46 AND 75 THRU 80 ARE POSITIONED TOWARD THE MATING FACE. (FIRST MATE)
7. CONTACTS 2 THRU 35, 44, AND 47 THRU 74 ARE POSITIONED AWAY FROM THE MATING FACE. (SECOND MATE)
8. CONTACTS: 0.76µm GOLD FOR A LENGTH 1.20 MIN STARTING 0.50 MAX FROM MATING END, 3.81µm MIN MATTE TIN FOR A LENGTH OF 3.43 MIN FROM OPPOSITE END, BOTH OVER 1.27µm MIN NICKEL.
9. RETENTION LEG: 3.81µm MIN HALT TIN OVER 1.27 µm MIN NICKEL.
10. OBSOLETE PARTS: OBSOLETE CIS STREAMLINING PER D.RENAUD/D.SINISI

OBSOLETE	8 9	4.57	80	~~787311-5~~
	8 9	3.18	80	787311-4
SUPERCEDED BY 787311-5	2 3	4.57	80	787311-3
OBSOLETE	2 3	3.18	80	787311-2
	2 3	3.18	80	787311-1
FINISH		J	POSN	PART NUMBER

THIS DRAWING IS A CONTROLLED DOCUMENT.

DIMENSIONS: mm

TOLERANCE UNLESS OTHERWISE SPECIFIED:
0 PLC ± –
1 PLC ± –
2 PLC ± 0.10
3 PLC ± –
4 PLC ± –
ANGLES ± –

MATERIAL: 1

FINISH: SEE TABLE

DWN C.DORWART 06/05/95
CHK R.STONE 06/15/95
APVD M.RUPERT 06/15/95

PRODUCT SPEC 108-1548
APPLICATION SPEC 114-6061
WEIGHT –

TE Connectivity

NAME: RECEPTACLE ASSEMBLY, VERTICAL, CHAMP TM, BLINDMATE .050 SERIES I

SIZE A1 | CAGE CODE 00779 | DRAWING NO C-787311 | RESTRICTED TO –

CUSTOMER DRAWING | SCALE 5:1 | SHEET 1 OF 1 | REV N3

4MOS (3/11)

Downloaded from Elcodis.com electronic components distributor