THIS DRAWING IS UNPUBLISHED. RELEASED FOR PUBLICATION ,19 .

© COPYRIGHT 19 BY AMP INCORPORATED. ALL RIGHTS RESERVED.

LOC	DIST
FT	8

REVISIONS

P	LTR	DESCRIPTION	DATE	DWN	APVD
	U	REDRAWN W/O CHANGE PER EC 0320-98-96	20 NOV 97	–	–

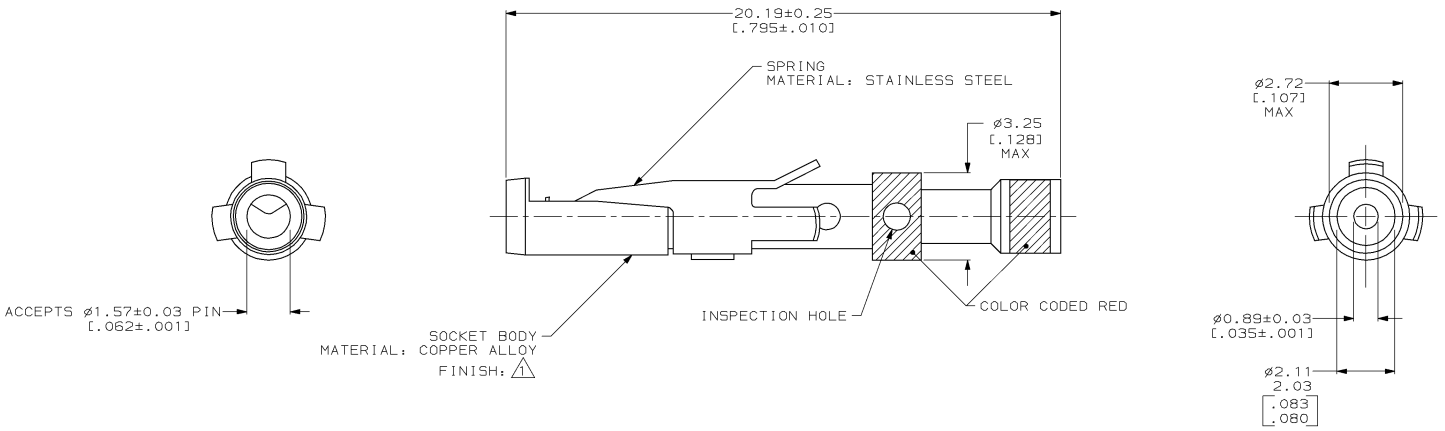

1 0.76µm [.000030] MIN GOLD OVER 1.27µm [.000050] MIN NICKEL.

201332

201332-1

PART NUMBER

THIS DRAWING IS A CONTROLLED DOCUMENT.

DIMENSIONS: mm [INCHES]

TOLERANCES UNLESS OTHERWISE SPECIFIED:
0 PLC ±–
1 PLC ±–
2 PLC ±0.13 [.005]
3 PLC ±–
4 PLC ±–
ANGLES ±–

MATERIAL: SEE CALLOUTS
FINISH: SEE CALLOUTS

DWN B.CARBO 20 NOV 97
CHK R.STONE 09 DEC 97
APVD B.STEINHAUER 16 DEC 97
PRODUCT SPEC –
APPLICATION SPEC –
WEIGHT –

AMP
AMP Incorporated
Harrisburg, PA 17105-3608

NAME: CONTACT ASSEMBLY, SOCKET, #16, 24-28AWG, TYPE II

SIZE	CAGE CODE	DRAWING NO	RESTRICTED TO
A2	00779	C- 201332	–

CUSTOMER DRAWING

SCALE	SHEET	OF	REV
10:1	1	1	U

AMP 1471-9 REV 11JUN87

20-NOV-97 08:27:40 amp40973 /home/ssrv026d/dsk04/dept4023/amp40973/edmmod

Downloaded from Elcodis.com electronic components distributor