THIS DRAWING IS UNPUBLISHED. RELEASED FOR PUBLICATION -.-.-
© COPYRIGHT - BY TYCO ELECTRONICS CORPORATION. ALL RIGHTS RESERVED.

LOC	DIST
AJ	16

REVISIONS

P	LTR	DESCRIPTION	DATE	DWN	APVD
	AE1	REVISED PER ECO-06-018704	05SEP2006	MC	JH

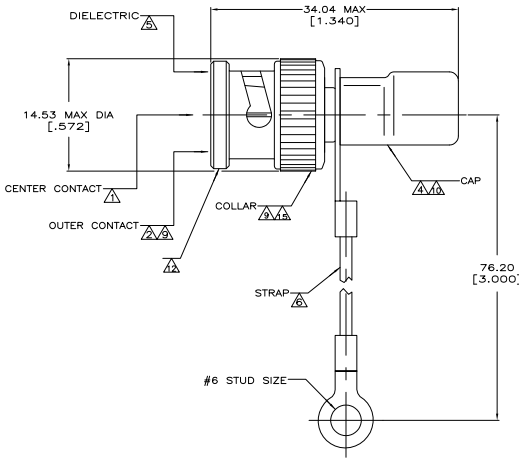

VIEW A

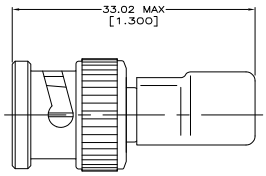

VIEW B

SAME AS VIEW A EXCEPT AS SHOWN

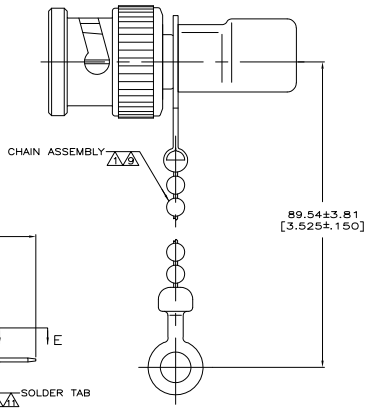

VIEW C

SAME AS VIEW A EXCEPT AS SHOWN

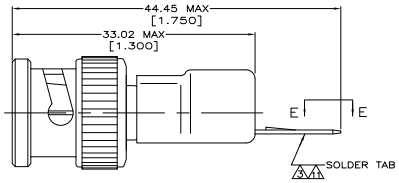

VIEW D

SAME AS VIEW A EXCEPT AS SHOWN

1. BRASS PER QQ-B-626.
2. BRASS PER MIL-C-21768.
3. BRASS PER MIL-C-50.
4. COPPER PER QQ-C-576.
5. POLYETHYLENE PER LP-390.
6. POLYESTER PER MIL-T-43435, COLOR NATURAL.
7. GOLD PLATE PER MIL-G-45204, 0.76 μm [.000030] MINIMUM THICK.
8. SILVER PLATE PER QQ-S-365, 2.54 μm [.000100] MINIMUM THICK.
9. NICKEL PLATE PER QQ-N-290, 1.27 μm [.000050] MINIMUM THICK.
10. TIN PLATE PER ASTM B 545, 2.54 μM [.000100] MIN THICK.
11. TIN PLATE PER ASTM B 545. 3.81 μm [.000150] MINIMUM THICK.
12. VALUE MARKED ON CONNECTOR BODY AS SHOWN. (SEE TABLE)
13. SEE SEPARATE RESTRICTED CUSTOMER DRAWING WITH THIS PART NUMBER.
14. 16 GAUGE INSULATED GROUND WIRE.
15. ZINC PER QQ-Z-363

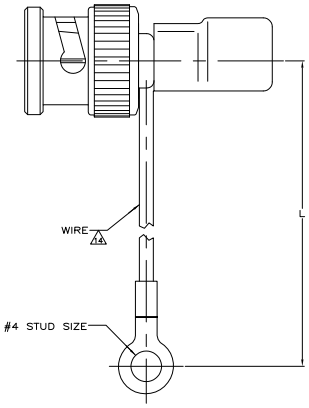

VIEW F

SAME AS VIEW A EXCEPT AS SHOWN

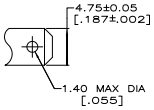

VIEW E-E

	WATT	TOLERANCE	OHM	MARKING 12	L	CENTER CONTACT PLATING	VIEW	PART NUMBER
	RESISTOR SPECIFICATIONS							
OBSOLETE	1	1%	50	50Ω 1W	–	2	B	9-221629-1
OBSOLETE	1	1%	50	50Ω 1W	–	2	A	9-221629-0
OBSOLETE	–	1%	50	50Ω 1W	2999.99525.40 [118.1181.00]	2	F	2-221629-2
OBSOLETE 13	–	–	–	–	–	–	–	2-221629-1
OBSOLETE 13	–	–	–	–	–	–	–	2-221629-0
OBSOLETE 13	–	–	–	–	–	–	–	1-221629-9
OBSOLETE	1	1%	50	50Ω 1W	–	2	B	1-221629-8
	1	1%	50	50Ω 1W	85.8522.03 [3.3858.080]	2	F	1-221629-6
OBSOLETE	1	1%	50	–	–	2	D	1-221629-2
OBSOLETE	.5	1%	75	75Ω .5W	–	2	C	1-221629-1
	1	1%	50	50Ω 1W	–	2	B	221629-9
OBSOLETE	1	1%	50	50Ω 1W	–	2	B	221629-8
OBSOLETE	.5	5%	100	100Ω .5W	–	2	B	221629-7
OBSOLETE	1	1%	93	93Ω 1W	–	2	B	221629-6
	1	1%	75	75Ω 1W	–	2	B	221629-5
	1	1%	50	50Ω 1W	–	2	B	221629-4
OBSOLETE	1	1%	93	93Ω 1W	–	2	A	221629-3
	1	1%	75	75Ω 1W	–	2	A	221629-2
	1	1%	50	50Ω 1W	–	2	A	221629-1

THIS DRAWING IS A CONTROLLED DOCUMENT.

DIMENSIONS: mm [INCHES]

TOLERANCE UNLESS OTHERWISE SPECIFIED: 0 PLC ± – ; 1 PLC ± – ; 2 PLC ± .13 [.125] ; 3 PLC ± – ; 4 PLC ± – ; ANGLES ± –

MATERIAL –

FINISH –

DWN	J. LIPPERT	9-22-90
CHK	R. F. RUTH	9-28-90
APVD	M. PHILIPS	10-1-90
PRODUCT SPEC	–	
APPLICATION SPEC	–	
WEIGHT	–	

Tyco Electronics Corporation
Harrisburg, PA 17105-3608

NAME: TERMINATOR, PLUG, COMMERCIAL BNC

SIZE	CAGE CODE	DRAWING NO	RESTRICTED TO
A1	00779	C-221629	–

CUSTOMER DRAWING | SCALE 4:1 | SHEET 1 OF 1 | REV AE1

AMP 4805 REV 31MAR2000

Downloaded from Elcodis.com electronic components distributor