REVISIONS			
REV	DESCRIPTION	DATE	APPROVED
01_1	REVISED	K.L 7-12-96	PGV 7/17/96

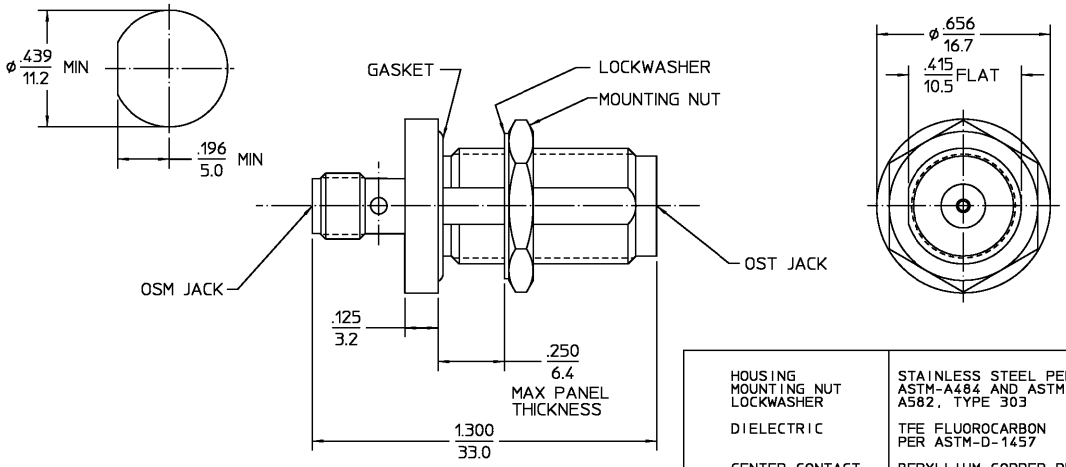

COMPONENT	MATERIAL	FINISH
HOUSING MOUNTING NUT LOCKWASHER	STAINLESS STEEL PER ASTM-A484 AND ASTM-A582, TYPE 303	PASSIVATE PER QQ-P-35
DIELECTRIC	TFE FLUOROCARBON PER ASTM-D-1457	N/A
CENTER CONTACT	BERYLLIUM COPPER PER ASTM-B-196 OR ASTM-B-197, ALLOY C17300, CONDITION H	GOLD PLATE PER MIL-G-45204
GASKET	FLUOROCARBON RUBBER PER MIL-R-83248. TYPE 1, CLASS 1	N/A

NOTES:
1. CAPTURED CENTER CONTACT

.XXX = in
XX.X = mm (REF)

UNLESS OTHERWISE SPECIFIED DIMENSIONS ARE IN INCHES

FRAC.	DEC.	ANGLES
± 1/64	±.005	± 1°

DRAWN BY	SWA	DATE 11-8-84
CHECKED BY	MLB	11-16-84
APP'D BY	DRG	11-23-84

M/A-COM an AMP company
M/A-COM, Inc.
Waltham, MA 02254

These drawings and specifications are the property of M/A COM Interconnect Div. and shall not be reproduced or copied or used in whole or in part as the basis for the manufacture or sale of item(s) without written permission.

USE ASS'Y PROCEDURE

NO. A.P. N/A

TITLE OST JACK TO OSM JACK BULKHEAD FEED THROUGH

SIZE	CODE IDENT NO.		REV
B	26805	3784-2240-00	01_1

SCALE 3:1 SHEET 1 OF 1

CUSTOMER DRAWING TYCO PART # 1058800-1
SHEET 1 OF 1, REV A

Downloaded from Elcodis.com electronic components distributor