THIS DRAWING IS UNPUBLISHED. RELEASED FOR PUBLICATION: -19 - -
© COPYRIGHT 19 BY AMP INCORPORATED. ALL RIGHTS RESERVED.

SOC	SIZE
AJ	16

REVISIONS

V	LTR	DESCRIPTION	DATE	DWN	APVD
	A	REV PER 0U20-0200-01	04APR01	MO	JL

1. CARBON STEEL PER ASTM-A-108
2. BRASS PER ASTM-B-16
3. PHOSPHOR BRONZE PER ASTM-B-139
4. POLYMETHYLPENTENE: GENERAL PURPOSE
5. SILICONE RUBBER PER ZZ-R-765
6. ZINC DIE CAST PER ASTM-B-86
7. GOLD PLATE PER MIL-G-45204, 0.76µm [.0000030] MIN THICKNESS
8. NICKEL PLATE PER QQ-N-290, 1.27µm [.0000500] MIN THICKNESS
9. NICKEL PLATE PER QQ-N-290, 2.54µm [.0001000] MIN THICKNESS

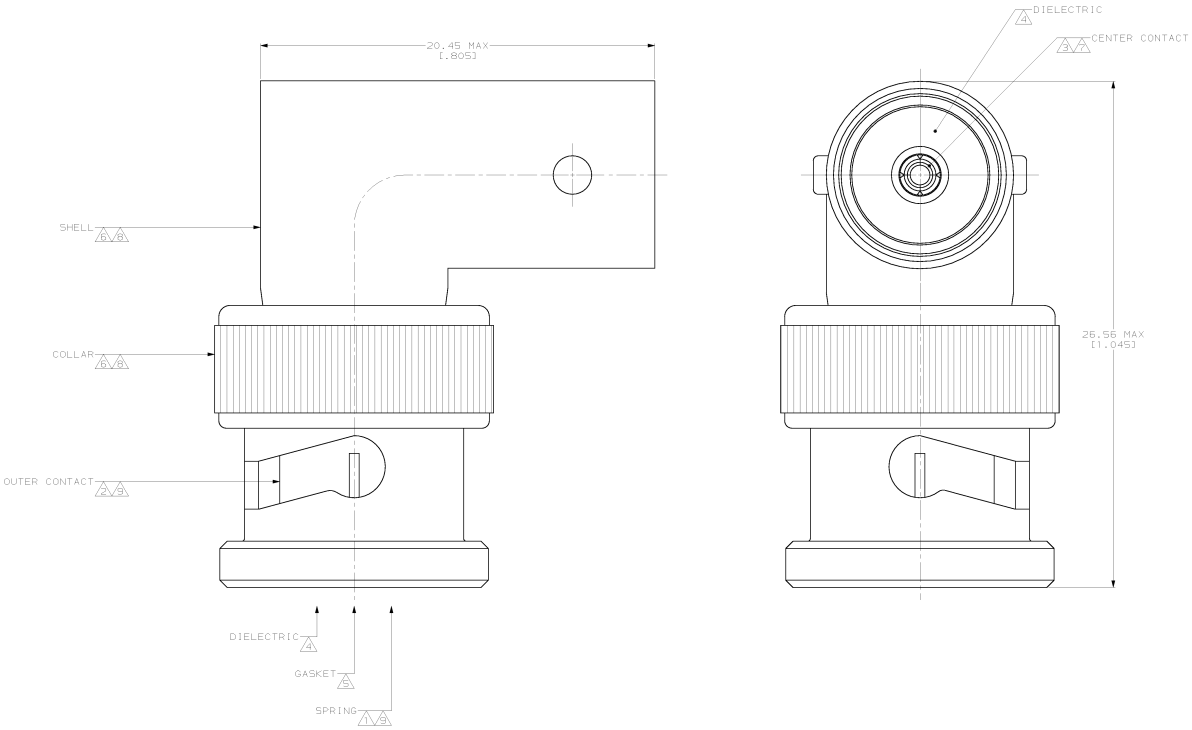

415020-1

PART NUMBER

THIS DRAWING IS CONSIDERED PRIMARY FOR AMP ENGINEERING. IT IS SUBJECT TO CHANGE ONLY BY CONTROLLED ENGINEERING. MANUFACTURE SHALL BE CONFORMED TO THE LATEST REVISION.

DIMENSIONS: mm [INCHES]

UNLESS OTHERWISE SPECIFIED ATTENTION: SPEC OFFICE

0 PLC ±-
0.0 PLC ±-
0.00 PLC ±-
0.000 PLC ±-
0.0000 PLC ±-
ANGLES ±-

MATERIAL: SEE NOTES

FINISH: SEE NOTES

DRAWN BY: M.E. COWHER (DRAWING)
CHECKED BY: M.J. PHILLIPS (DRAWING)
APVD BY: M.J. PHILLIPS (CONTROL)
PRODUCT SPEC: 108-12096
APPLICATION SPEC: –
WEIGHT: –

CUSTOMER DRAWING

AMP

AMP Incorporated
Harrisburg, PA 17105-3608

TITLE: PLUG-JACK ADAPTER, RIGHT ANGLE, 75 OHM, BNC

SIZE: A1 CODE IDENT: 00779 DRAWING NO: C-415020

SCALE: 10:1 SHEET: 1 OF 1 REV: A

AMP 4805 REV 10/93

04-APR-01 14:26:12 amp08572/home/amp08572/edmmod

Downloaded from Elcodis.com electronic components distributor