REVISIONS			
REV	DESCRIPTION	DATE	APPROVED
02_2	REDRAWN IN CAD PER ECN96-0048	JBJ 6/10/96	

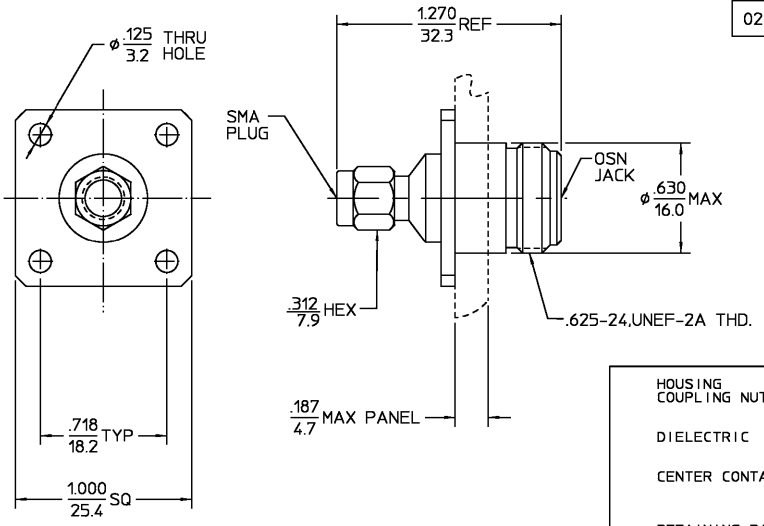

COMPONENT	MATERIAL	FINISH
HOUSING COUPLING NUT	STAINLESS STEEL PER ASTM-A484 AND ASTM-A582, TYPE 303	PASSIVATE PER QQ-P-35
DIELECTRIC	TFE FLUOROCARBON PER ASTM-D-1457	N/A
CENTER CONTACT	BERYLLIUM COPPER PER ASTM-B-196 OR ASTM-B-197, ALLOY C17300, CONDITION H	GOLD PLATE PER MIL-G-45204
RETAINING RING	BERYLLIUM COPPER PER ASTM-B-194, ALLOY C17200, CONDITION H	GOLD PLATE PER MIL-G-45204
GASKET	SILICONE RUBBER PER ZZ-R-765	N/A

UNLESS OTHERWISE SPECIFIED DIMENSIONS ARE IN INCHES

GEN. TOL ±.005 ANGLES ± 1°

		DATE
DRAWN BY	B.M.	9/28/89
CHECKED BY	S.A.	10/2/89
APP'D BY	B.C.	10/20/89

AMP

AMP Incorporated
140 Fourth Avenue
Waltham, MA 02451-7599

These drawings and specifications are the property of M/A COM Interconnect Div. and shall not be reproduced or copied or used in whole or in part as the basis for the manufacture or sale o f them(s) without written permission.

.XXX = in
XX.X = mm

TITLE OSN JACK TO OSM PLUG ADAPTER 4 HOLE FLANGE MOUNT

SIZE	CODE IDENT NO.		REV
B	26805	3082-2243-00	02_2
SCALE 2:1			SHEET 1 OF 1

NOTES:
1.CAPTURED CENTER CONTACT
2.VSWR:DC-12.4GHz :1.05+.005fGHz
12.4-15.0 GHz :.83+.023fGHz

CUSTOMER DRAAWING

AMP PART # 1057385-1
SHEET 1 OF 1 REV A

Downloaded from Elcodis.com electronic components distributor