THIS DRAWING IS UNPUBLISHED. | RELEASED FOR PUBLICATION JUNE ,2005.

© COPYRIGHT 2005 BY TYCO ELECTRONICS CORPORATION. ALL RIGHTS RESERVED.

LOC	DIST
E	B

REVISIONS

P	LTR	DESCRIPTION	DATE	DWN	APVD
	A	FIRST ISSUE	28JUN05	JS	FWK

NOTES:

1. SINGLE PACK IN ACCORDANCE WITH AMP SPEC 107-3275
2. Ni PLATING OVER Cu PLATING
3. FOR TECHNICAL DATA REFER TO YOUR LOCAL TYCO ELECTRONICS SALES OFFICE
4. ALL DIMENSIONS ARE NOMINAL FOR REFERENCE ONLY UNLESS OTHERWISE STATED

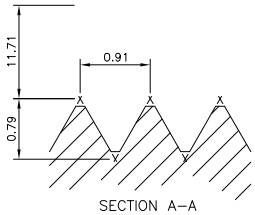

SECTION A–A
SCALE 20:1

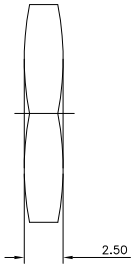

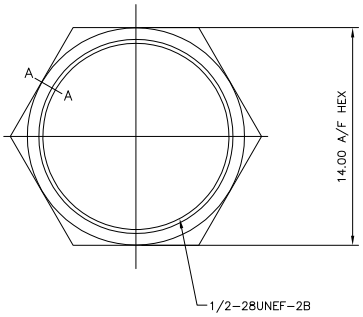

QUANTITY				PARTS LIST	
			1	BRASS 2	HEXAGONAL NUT
			1--0	MATERIAL	DESCRIPTION
			1		

THIS DRAWING IS A CONTROLLED DOCUMENT.

DIMENSIONS: MM

TOLERANCES UNLESS OTHERWISE SPECIFIED:
0 PLC ± –
1 PLC ± –
2 PLC ± –
3 PLC ± –
4 PLC ± –
ANGLES ± –

MATERIAL: SEE TABLE

FINISH: SEE TABLE

DWN J.SANDWELL 08JAN04
CHK S.PARLOW 28JUN05
APVD F.WHEELER-KING 28JUN05
PRODUCT SPEC —
APPLICATION SPEC —
WEIGHT —

tyco Electronics
Tyco Electronics Corporation
Bideford, UK, EX39 4HE

NAME: BNC/TNC HEXAGONAL NUT
–
–

SIZE	CAGE CODE	DRAWING NO	RESTRICTED TO
A3	00779	C-1634816	—

CUSTOMER DRAWING | SCALE NTS | SHEET 1 OF 1 | REV A

AMP 1470-19 REV 31MAR2000

Downloaded from Elcodis.com electronic components distributor