THIS DRAWING IS UNPUBLISHED. RELEASED FOR PUBLICATION -.-. -
© COPYRIGHT - BY TYCO ELECTRONICS CORPORATION. ALL RIGHTS RESERVED.

LOC	DIST
FT	8

REVISIONS

P	LTR	DESCRIPTION	DATE	DWN	APVD
	N1	REVISED PER ECO-07-000274	1/8/07	SS	GS

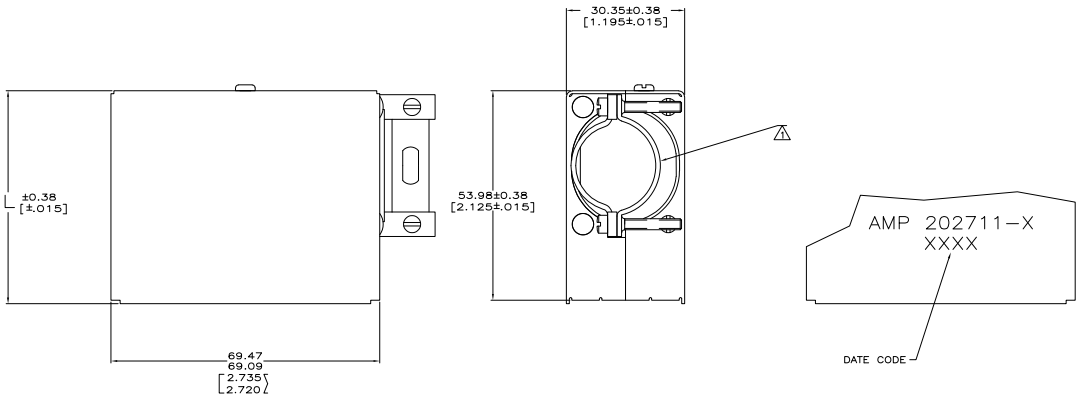

ASSEMBLED VIEW

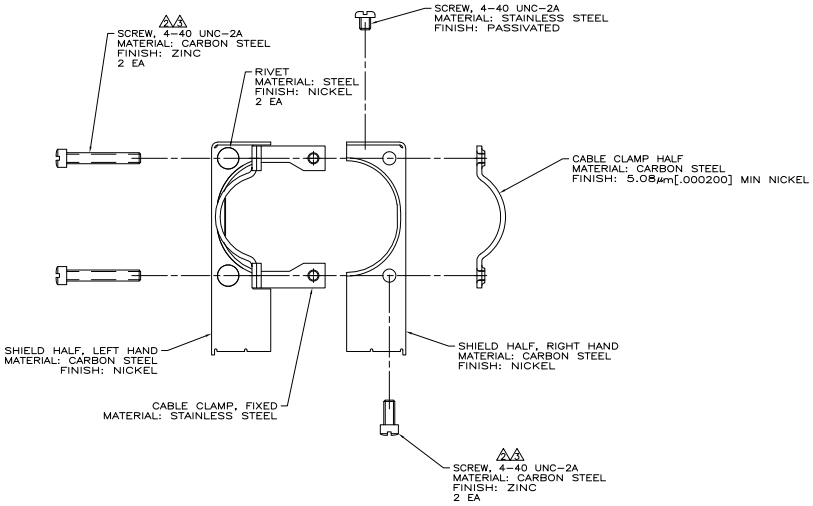

1. CABLE CLAMP WILL ACCEPT 12.70 TO 25.40 [.500 TO 1.000] DIA CABLE (USE BUSHING 202038 OR 202039 FOR 12.70 [.500] DIA CABLE).
2. ZINC PLATING WITH HEXAVALENT CHROMATE COATING.
3. ZINC PLATING WITHOUT HEXAVALENT CHROMATE COATING.

3	71.04 [2.797]	1-202711-2
1	54.86 [2.160]	1-202711-1
2	71.04 [2.797]	202711-3
2	54.86 [2.160]	202711-1
SCREW FINISH	L	PART NUMBER

THIS DRAWING IS A CONTROLLED DOCUMENT.

DIMENSIONS: mm

TOLERANCE UNLESS OTHERWISE SPECIFIED:
0 PLC ± -
1 PLC ± -
2 PLC ± -
3 PLC ± -
4 PLC ± -
ANGLES ± -

MATERIAL -
FINISH -

DRN C.OBERMAN 22 AUG 96
CHK R.STONE 09 AUG 96
APVD D.STEINHAUER 31 JAN 97
PRODUCT SPEC —
APPLICATION SPEC —
WEIGHT —

Tyco Electronics Corporation
Harrisburg, PA 17105-3608

NAME SHIELD KIT, UNASSEMBLED, 75 POSITION, 2 PIECE, M SERIES

SIZE A1 CAGE CODE 00779 DRAWING NO C-202711 RESTRICTED TO —

CUSTOMER DRAWING SCALE 2:1 SHEET 1 OF 1 REV N1

AMP 4805 REV 31MAR2000

Downloaded from Elcodis.com electronic components distributor