THIS DRAWING IS UNPUBLISHED. | RELEASED FOR PUBLICATION APRIL ,2004.

© COPYRIGHT 2004 BY TYCO ELECTRONICS CORPORATION. ALL RIGHTS RESERVED.

LOC	DIST
E	B

REVISIONS

P	LTR	DESCRIPTION	DATE	DWN	APVD
	A	EBD0-0035-03	12FEB04	RS	FWK

NOTES:

1. SINGLE PACK IN ACCORDANCE WITH SPEC 107-3275
2. 100 TRAY PACK IN ACCORDANCE WITH SPEC 107-3275
3. 0.08µm Au PLATING OVER 1.27µm Ni PLATING
4. 0.08µm Au PLATING OVER 1.27µm Ni PLATING OVER 0.76µm Cu PLATING
5. 0.76µm Au PLATING OVER 1.27µm Ni PLATING OVER 0.76µm Cu PLATING
6. PASSIVATED
7. WHITE BRONZE PLATING
8. PLATING AS PER BODY, EXCEPT FOR PASSIVATED WHICH IS NICKEL PLATED
9. FOR TECHNICAL DATA REFER TO YOUR LOCAL TYCO ELECTRONICS SALES OFFICE
10. ALL DIMENSIONS ARE NOMINAL FOR REFERENCE ONLY UNLESS OTHERWISE STATED

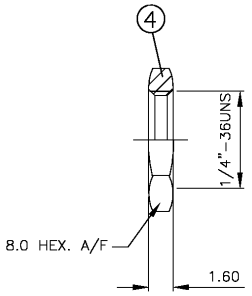

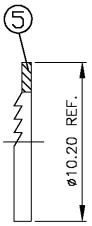

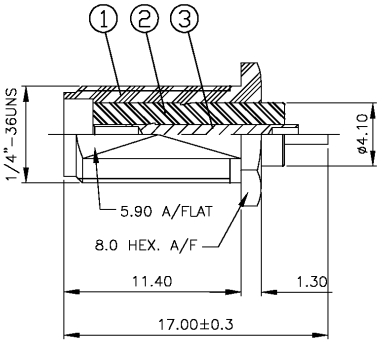

RECOMMENDED MOUNTING HOLE DIM'S

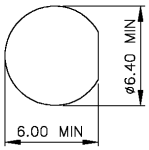

4--1	4--0	3--1	3--0	2--1	2--0	1--1	1--0	MATERIAL	DESCRIPTION	ITEM
2	1	2	1	2	1	2	1			
QUANTITY PER ASSY								PARTS LIST		
1	1	1	1	1	1	1	1	STAINLESS STEEL 8	WASHER	5
1	1	–	–	–	–	–	–	BRASS 7	NUT	4
–	–	1	1	–	–	–	–	BRASS 4	NUT	4
–	–	–	–	1	1	1	1	STAINLESS STEEL 8	NUT	4
1	1	1	1	1	1	1	1	BERYLLIUM COPPER 5	CENTER SOCKET	3
1	1	1	1	1	1	1	1	PTFE	INSULATOR	2
1	1	–	–	–	–	–	–	BRASS 7	BODY	1
–	–	1	1	–	–	–	–	BRASS 4	BODY	1
–	–	–	–	1	1	–	–	STAINLESS STEEL 6	BODY	1
–	–	–	–	–	–	1	1	STAINLESS STEEL 3	BODY	1

THIS DRAWING IS A CONTROLLED DOCUMENT.

DIMENSIONS: mm

TOLERANCES UNLESS OTHERWISE SPECIFIED:
0 PLC ± –
1 PLC ± –
2 PLC ± –
3 PLC ± –
4 PLC ± –
ANGLES ± –

MATERIAL: SEE TABLE

FINISH: –

DWN R.SMITH 12FEB04
CHK S.PARLOW 12FEB04
APVD F.WHEELER-KING 12FEB04
PRODUCT SPEC 108-3460
APPLICATION SPEC 411-3276
WEIGHT –

tyco Electronics
Tyco Electronics Corporation
Bideford, UK, EX39 4HE

NAME: SMA BULKHEAD SOCKET RECEPTACLE REAR MOUNT SOLDER SPILL –

SIZE	CAGE CODE	DRAWING NO	RESTRICTED TO
A3	00779	C-1478966	–

CUSTOMER DRAWING | SCALE 1:1 | SHEET 1 OF 1 | REV A

AMP 1470-19 REV 31MAR2000

Downloaded from Elcodis.com electronic components distributor