THIS DRAWING IS UNPUBLISHED. RELEASED FOR PUBLICATION -,- .
© COPYRIGHT - BY TYCO ELECTRONICS CORPORATION. ALL RIGHTS RESERVED.

LOC	DIST
—	—

REVISIONS

P	LTR	DESCRIPTION	DATE	DWN	APVD
	B	REV PER ECO 07-004710	3/14/2007	DW	KW

DESIGNED FOR USE WITH .141 DIA S.R. CABLE	
CABLE ENTRY DIAMETER MINIMUM	
CONTACT	.039
HOUSING	.144

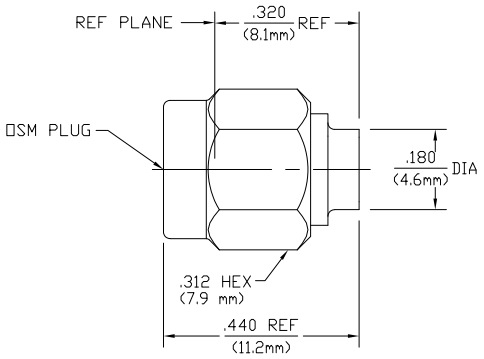

1050525-1

PART NUMBER

COMPONENT	MATERIAL	FINISH
HOUSING	STAINLESS STEEL PER ASTM-A484 AND ASTM-A582, TYPE 303	GOLD PLATE PER MIL-G-45204 OVER NICKEL PLATE PER QQ-N-290
COUPLING NUT	STAINLESS STEEL PER ASTM-A484 AND ASTM-A582, TYPE 303	PASSIVATE PER ASTM-A-380
DIELECTRIC	TFE FLUOROCARBON PER ASTM-D-1457	N/A
CENTER CONTACT	BERYLLIUM COPPER PER ASTM B 196, ALLOY C17300, CONDITION H OR BRASS PER ASTM-B-16	GOLD PLATE PER MIL-G-45204 OVER COPPER PLATE PER MIL-C-14550
RETAINING RING	BERYLLIUM COPPER PER ASTM B 194, ALLOY C17200, CONDITION H	N/A
GASKET	SILICONE RUBBER PER ZZ-R-765	N/A

1050525

ELECTRICAL	MECHANICAL	ENVIRONMENTAL
Nominal Impedance (Ohms) 50	Interface Dimensions MIL-STD-348, Fig. 310.1	TEMPERATURE RATING -65°C TO 105°C
Frequency Range (GHz) DC to 18.0	Recommended Mating Torque 7 to 10 in-LBs	Vibration MIL-STD-202, Method 204, Condition D
Volt Rating (VRMS MAX) @ Sea Level 500	Mating Characteristics: Insertion (MAX Lbs) N/A	Shock MIL-STD-202, Method 213, Condition I
VSWR 1.05 + .008f(GHz)	Withdrawal (MIN Oz) N/A	Thermal Shock MIL-STD-202, Method 107, Condition B, EXCEPT HIGH TEMP 115°C
Insertion Loss (dB MAX) .03 $\sqrt{f(GHz)}$	Force to Engage and Disengage (In/Lbs MAX) 2.0	Moisture Resistance MIL-STD-202, Method 106,
RF Leakage (dB MIN) -(90-f(GHz)	Center Contact Captivation Axial (Lbs) N/A	Corrosion - MIL-STD-202, Method 101, Condition B, 5% salt spray
Corona, 70,000 Ft (VRMS MIN) 375	Radial (In/Oz) N/A	
Dielectric Withstanding Voltage (VRMS MIN) @ Sea Level 1000	Cable Retention Axial Force (Lbs) 60	
Contact Resistance (Milliohms MAX) Center Contact 3.0	Torque (In/Oz) 55	
Outer Contact 2.0	Weight (Grams) T.B.D.	
Cable to Housing 0.5		
RF High Potential @ Sea Level (VRMS MIN @ 5 MHz) 1000		
I.R.(Megohms MIN) 5,000		

THIS DRAWING IS A CONTROLLED DOCUMENT.

DIMENSIONS: INCHES

TOLERANCES UNLESS OTHERWISE SPECIFIED:
0 PLC ± -
1 PLC ± -
2 PLC ± -
3 PLC ± .005
4 PLC ± -
ANGLES ± 1°

MATERIAL -
FINISH -

DWN JPD 8/31/76
CHK RNF 9/7/76
APVD RNF 9/7/76
PRODUCT SPEC —
APPLICATION SPEC —
WEIGHT —

CUSTOMER DRAWING

Tyco Electronics Corporation
Harrisburg, PA 17105-3608

NAME OSM STRAIGHT CABLE PLUG DIRECT SOLDER ATTACHMENT

SIZE	CAGE CODE	DRAWING NO	RESTRICTED TO
A2	00779	C-1050525	—

SCALE	SHEET	REV
5:1	1 OF 1	B

AMP 1471-9 REV 31MAR2000

Downloaded from Elcodis.com electronic components distributor