THIS DRAWING IS UNPUBLISHED. RELEASED FOR PUBLICATION JAN ,2005.
© COPYRIGHT 2005 BY TYCO ELECTRONICS CORPORATION. ALL RIGHTS RESERVED.

| LOC | DIST |
|---|---|
| E | B |

REVISIONS

| P | LTR | DESCRIPTION | DATE | DWN | APVD |
|---|---|---|---|---|---|
| | B | ECO-09-003420 | 14 Feb 09 | RITA | BOB |

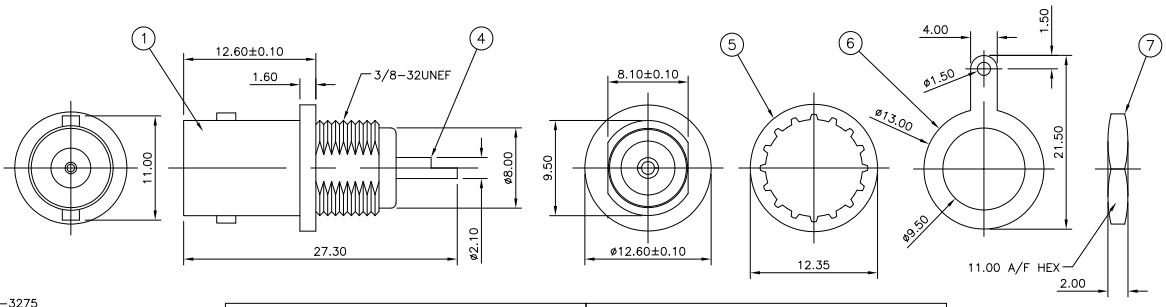


NOTES

1. 100 TRAY PACK IN ACCORDANCE WITH AMP SPEC 107-3275
2. SINGLE PACK IN ACCORDANCE WITH AMP SPEC 107-3275
3. Au PLATING OVER Ni PLATING OVER Cu PLATING
4. Ni PLATING OVER Cu PLATING
5. FOR TECHNICAL DATA REFER TO YOUR LOCAL TYCO ELECTRONICS SALES OFFICE
6. ALL DIMENSIONS ARE NOMINAL FOR REFERENCE ONLY UNLESS OTHERWISE STATED

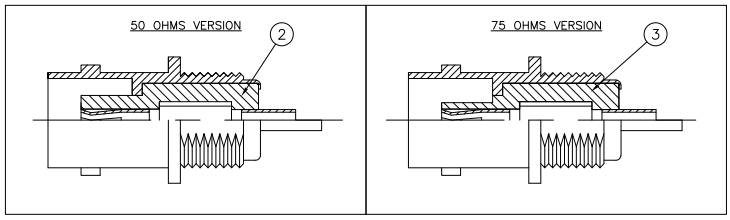


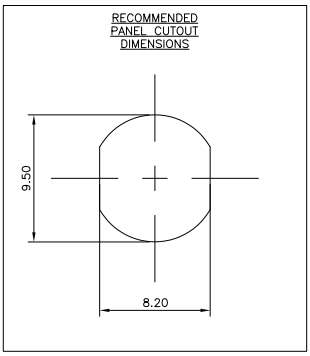


| QUANTITY PER ASSY | | | | | | | | PARTS LIST | | |
|---|---|---|---|---|---|---|---|---|---|---|
| | | | | 1 | 1 | 1 | 1 | BRASS [4] | HEX NUT | 7 |
| | | | | 1 | 1 | 1 | 1 | BRASS [4] | SOLDER TAG | 6 |
| | | | | 1 | 1 | 1 | 1 | STEEL [4] | LOCK WASHER | 5 |
| | | | | 1 | 1 | 1 | 1 | PHOS BRONZE [3] | CONTACT | 4 |
| | | | | 1 | 1 | – | – | POLYMETHYLPENTENE | INSULATOR | 3 |
| | | | | – | – | 1 | 1 | POLYMETHYLPENTENE | INSULATOR | 2 |
| | | | | 1 | 1 | – | – | ZINC ALLOY [4] | BODY | 1 |
| | | | | 5--3 | 5--2 | 5--1 | 5--0 | MATERIAL | DESCRIPTION | ITEM |
| | | | | [2] | [1] | [2] | [1] | | | |

THIS DRAWING IS A CONTROLLED DOCUMENT.

DIMENSIONS: MM

TOLERANCES UNLESS OTHERWISE SPECIFIED:

| | |
|---|---|
| 0 PLC | ± 0.5 |
| 1 PLC | ± 0.3 |
| 2 PLC | ± 0.2 |
| 3 PLC | ± – |
| 4 PLC | ± – |
| ANGLES | ± – |

MATERIAL: SEE TABLE

FINISH: –

DWN RITA ZUO 14 Feb 09
CHK ANSON MA 14 Feb 09
APVD BOB ZHAO 14 Feb 09
PRODUCT SPEC 108-112000
APPLICATION SPEC –
WEIGHT –

Tyco Electronics

Tyco Electronics Corporation
Kunshan,Jiangsu,PRC 215312

NAME: BNC BULKHEAD SOCKET FRONT MOUNT WITH SOLDER TAG –

| SIZE | CAGE CODE | DRAWING NO | RESTRICTED TO |
|---|---|---|---|
| A3 | 00779 | C-1634523 | – |

CUSTOMER DRAWING | SCALE NTS | SHEET 1 OF 1 | REV B

AMP 1470-19 REV 31MAR2000

Downloaded from Elcodis.com electronic components distributor