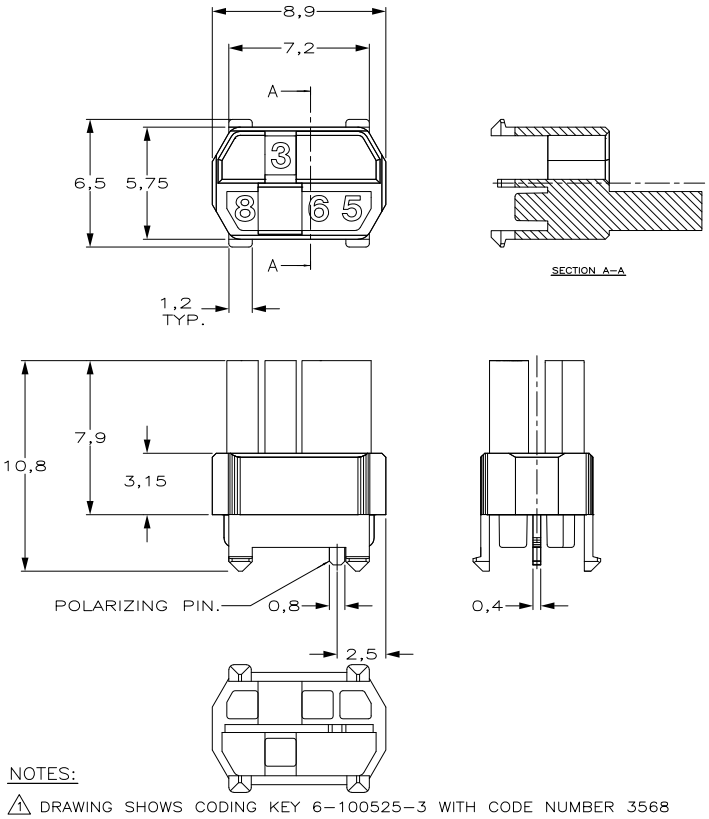

NOTES:

1. DRAWING SHOWS CODING KEY 6–100525–3 WITH CODE NUMBER 3568 AS AN EXAMPLE. REINFORCED CODING KEYS ARE DESIGNED FOR THE 8 ROW CONNECTOR SYSTEM, BUT FIT THE 5 ROW CONNECTOR SYSTEM AS WELL.
2. DRAWING SHOWS CODING KEY 2–100525–4 WITH CODE NUMBER 1368 AS AN EXAMPLE.
3. MATERIAL: GLASSFILLED POLYAMIDE 6.6.; COLOUR: SEE TABLE.
4. EACH CODING KEY HAS FOUR BLOCKING PINS AND FOUR CAVITIES. THE NUMBERS ON TOP OF THE BLOCKING PINS FORM THE FOUR–FIGURE IDENTIFICATION NUMBER (ASCENDING).
5. PARTNUMBER MATCHING FEMALE CODING KEY, FOR REFERNCE ONLY.

6 1 INSERTION TOOL INCLUDED PER 500 CODING KEYS.

DO NOT SCALE
DIMENSIONS IN mm

METRIC

THIRD ANGLE PROJECTION

FEMALE KEY 5	COLOUR 3	RAL NR. 3	ID. NUMBER 4	PARTNUMBER
6–100526–3	PASTEL ORANGE	2003	3568 1	6–100525–3
6–100526–1	STEEL BLUE	5011	3478	6–100525–1
5–100526–9	SLATE GREY	7015	3467	5–100525–9
5–100526–6	CADMIUM YELLOW	1021	3456	5–100525–6
5–100526–4	RESADA GREEN	6011	2578	5–100525–4
3–100526–2	BRILLIANT BLUE	5007	1567	3–100525–2
100526–9	STRAWBERRY RED	3018	1248	100525–9
100526–3	NUT BROWN	8011	1236	100525–3

LTR.	REVISION RECORD	DR.	CHK.	DATE
D1	ECO–11–005030	RK	HMR	22MAR11

CUSTOMER DRAWING — FOR REFERENCE ONLY WILL NOT BE UPDATED

THIS DRAWING IS UNPUBLISHED
~~RELEASED FOR PUBLICATION – ,19 –~~

TE Connectivity

NAME: Z–PACK 2mm HM MALE CODING KEYS

DR.: D. TRUREN DATE: 03–FEB–98
CHK.: D. TRUREN DATE: 03–FEB–98
APP.: F.v.KONINGSBRUGGE DATE: –

DWG.No. C–100525 | REV.LTR. D1 | SHEET 1 OF 2 | A3

R6–128 (REV.04–91)

Downloaded from Elcodis.com electronic components distributor

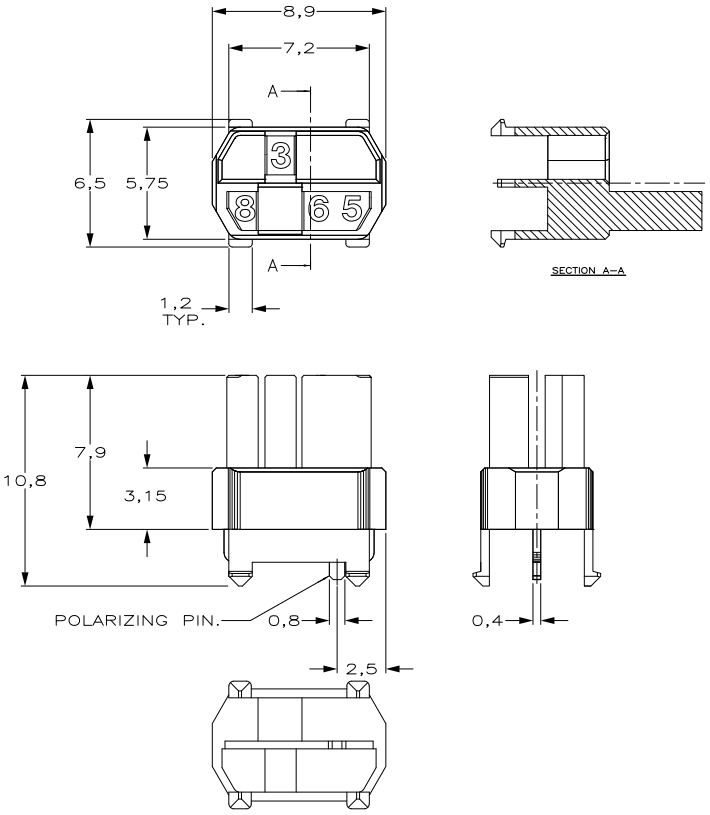

DO NOT SCALE

DIMENSIONS IN mm

METRIC

THIRD ANGLE PROJECTION

–	–	–	–	–
–	–	–	–	–
–	–	–	–	–
–	–	–	–	–
–	–	–	–	–
–	–	–	–	–
–	–	–	–	–
–	–	–	–	–
–	–	–	–	–
–	–	–	–	–
6–100526–9	OCHER YELLOW	1024	4678	6–100525–9
6–100526–4	RASPBERRY RED	3027	3578	6–100525–4
5–100526–3	OCEAN BLUE	5020	2568	5–100525–3
5–100526–2	EMERALD GREEN	6001	2567	5–100525–2
4–100526–9	YELLOW ORANGE	2000	2467	4–100525–9
4–100526–8	HEATHER VIOLET	4003	2458	4–100525–8
4–100526–4	COPPER BROWN	8004	2368	4–100525–4
4–100526–3	STONE GREY	7030	2367	4–100525–3
3–100526–7	PURPLE RED	3004	2346	3–100525–7
3–100526–5	SALMON PINK	3022	1678	3–100525–5
3–100526–4	RED LILAC	4001	1578	3–100525–4
2–100526–7	LIGHT IVORY	1015	1457	2–100525–7
2–100526–6	PASTEL GREEN	6019	1456	2–100525–6
2–100526–4	YELLOW GREEN	6018	1368 △2	2–100525–4
2–100526–0	BLUE LILAC	4005	1356	2–100525–0
1–100526–8	PIGEON BLUE	5014	1347	1–100525–8
1–100526–4	OLIVE YELLOW	1020	1268	1–100525–4
1–100526–3	CEMENT GREY	7033	1267	1–100525–3
1–100526–2	LIGHT GREEN	6027	1258	1–100525–2
100526–8	PURE ORANGE	2004	1247	100525–8
100526–5	ULTRAMARINE BLUE	5002	1238	100525–5
100526–2	GREEN BROWN	8000	1235	100525–2
FEMALE KEY △5	COLOUR △3	RAL NR. △3	ID. NUMBER △4	PARTNUMBER

CUSTOMER DRAWING — FOR REFERENCE ONLY WILL NOT BE UPDATED

THIS DRAWING IS UNPUBLISHED
~~RELEASED FOR PUBLICATION – ,19 –~~

TE Connectivity

NAME: Z–PACK 2mm HM MALE CODING KEYS

SEE SHEET1

LTR.	REVISION RECORD	DR.	CHK.	DATE

DR.: D. TRUREN	CHK.: D. TRUREN	APP.: F.v.KONINGSBRUGGE
DATE: 03–FEB–98	DATE: 03–FEB–98	DATE: –

DWG.No. C–100525 | REV.LTR. D1 | SHEET 2 OF 2 | A3

R6–128 (REV.04–91)

Downloaded from Elcodis.com electronic components distributor