REV.	DATE	DESCRIPTION
NC	01/29/03	INITIAL RELEASE

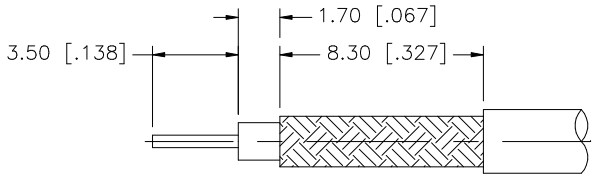

RECOMMENDED
CABLE STRIPPING DIM'S

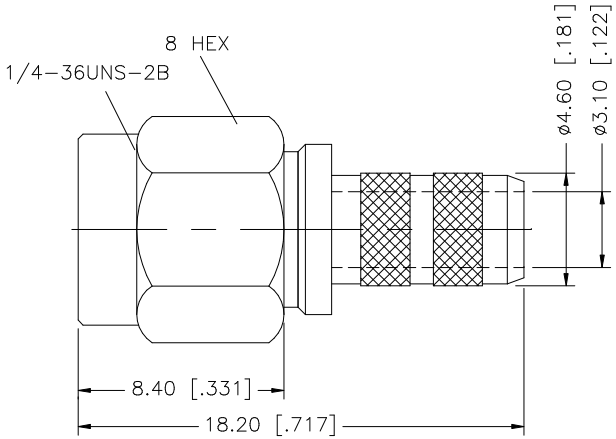

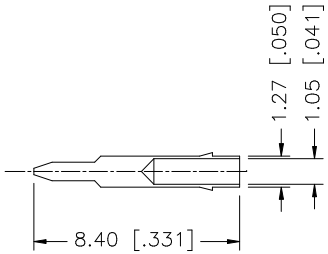

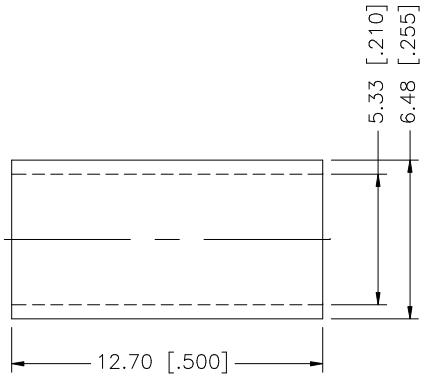

NOTE:

1. CRIMPED FERRULE
   HEX CRIMP SIZE .213"

	DESCRIPTION	MATERIAL	FINISH	QTY
8				
7				
6	FERRULE	COPPER	GOLD	1
5	GASKET	SILICONE	RED	1
4	CONTACT PIN	BRASS	GOLD	1
3	RETAINER RING	BER. COPPER	NATURAL	1
2	INSULATOR	TEFLON	NATURAL	1
1	SHELL/BODY	BRASS	GOLD	1

UNLESS OTHERWISE SPECIFIED DIMENSIONS ARE IN MILLIMETERS. DIMENSIONS IN [ ] ARE IN INCHES AND FOR CUSTOMER REFERANCE ONLY.

UNLESS OTHERWISE SPECIFIED TOLERANCES FOR MILLIMETERS ARE:
0.5 – 8mm ± 0.20mm
8 – 30mm ± 0.40mm
30 – 120mm ± 0.50mm

UNLESS OTHERWISE SPECIFIED TOLERANCES FOR INCHES ARE:
.020 – .315 = ± 0.007"
.315 – 1.180 = ± 0.015"
1.180 – 4.724 = ± 0.020"

DO NOT SCALE DRAWING

APPROVALS		DATE
DRAWN	G.R.S.	01/29/03
CHECKED		
ISSUED		
SHEET	1 OF 1	
CAD FILE	C:/132/132113.DWG	

Amphenol Connex

PART DESCRIPTION
SMA CRIMP PLUG
(FOR RG-58C/U, 58/U CABLE)

PART NO. 132113

DWG. NO.	REV.	SIZE	SCALE
132113.DWG	NC	A	NA

Downloaded from Elcodis.com electronic components distributor