THIS DRAWING IS UNPUBLISHED. RELEASED FOR PUBLICATION
© COPYRIGHT – BY TYCO ELECTRONICS CORPORATION. ALL RIGHTS RESERVED.

LOC	DIST	REVISIONS				
AJ	16	P	LTR	DESCRIPTION	DATE	DRN	APVD
			A	REVISED PER EC 0S14-0150-05	30AUG05	BM	JL

1. ZINC PER QQ-Z-363.
2. POLYMETHYLPENTENE, GENERAL PURPOSE.
3. BERYLLIUM COPPER PER QQ-C-530.
4. BRASS PER ASTM-B-453.
5. BRASS PER ASTM-B-16.
6. NICKEL PLATE PER QQ-N-290, 3.81 µm [.000150] MINIMUM THICK.
7. TIN PLATE PER ASTM-B-545, 3.81 µm [.000150] MINIMUM THICK.
8. GOLD PLATE PER MIL-G-45204, 0.76 µm [.000030] MINIMUM THICK.
9. SEE INSTRUCTION SHEET 408-2769.

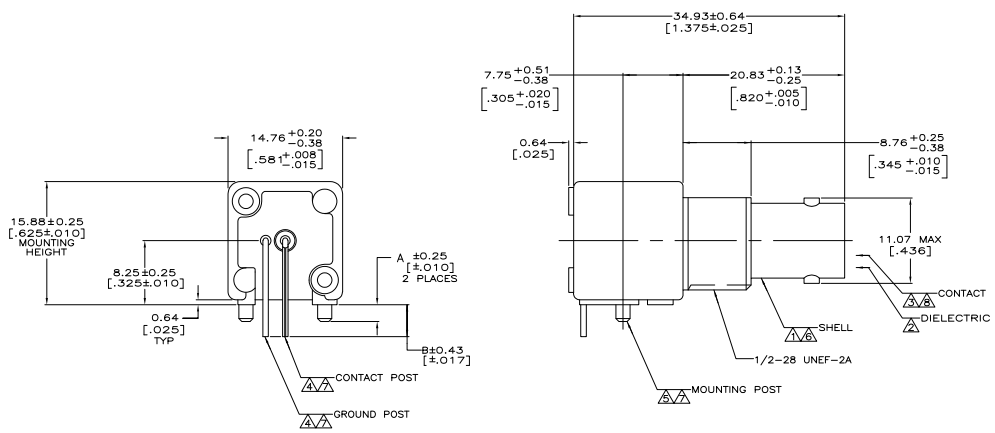

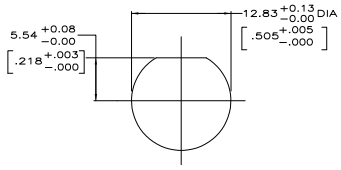

RECOMMENDED PANEL CUTOUT

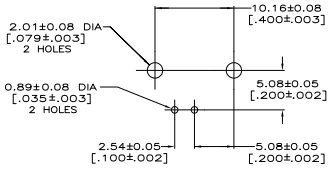

PCB CONFIGURATION

4.11	[.162]	3.48	[.137]	5222092-3
4.11	[.162]	2.16	[.085]	5222092-1
B		A		PART NUMBER

THIS DRAWING IS A CONTROLLED DOCUMENT.

DIMENSIONS: mm [INCHES]

TOLERANCES UNLESS OTHERWISE SPECIFIED: 0 PLC ± – ; 1 PLC ± – ; 2 PLC ± 0.30 [.008] ; 3 PLC ± – ; 4 PLC ± – ; ANGLES ± –

MATERIAL: SEE NOTES 1-5

FINISH: SEE NOTES 6-8

DRN: J. ALCORTA – DOCK5 | DSN: J. HAVENER | APVD: J. LIPPERT | PRODUCT SPEC: – | APPLICATION SPEC: – | WEIGHT: –

Tyco Electronics Corporation
Harrisburg, Pa 17105-3608

NAME: JACK, RIGHT ANGLE, PCB
75 OHM, SERIES BNC
–

SIZE: A1 | CAGE CODE: 00779 | DRAWING NO: C-5222092 | RESTRICTED TO: –

CUSTOMER DRAWING | SCALE: 4:1 | SHEET 1 OF 1 | REV: A

AMP 4805 REV 3/18/02/000

Downloaded from Elcodis.com electronic components distributor