THIS DRAWING IS UNPUBLISHED. RELEASED FOR PUBLICATION -,- .
© COPYRIGHT - BY TYCO ELECTRONICS CORPORATION. ALL RIGHTS RESERVED.

LOC	DIST
FT	0

REVISIONS

P	LTR	DESCRIPTION	DATE	DWN	APVD
	A	-	7/18/07	SS	SH

1. KIT TO INCLUDE (1) CABLE CLAMP ASSEMBLY AND (1) PLUG ASSEMBLY EACH PACKAGED SEPARATELY IN (1) CONTAINER.

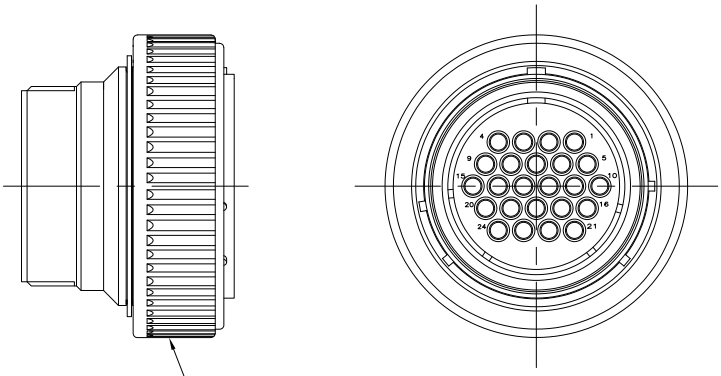

PLUG ASSEMBLY, STD SEX
SERIES 1, 28-24, CMC

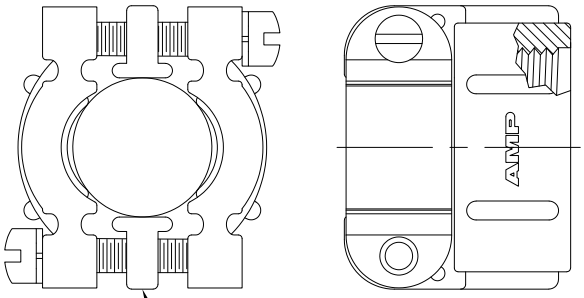

CABLE CLAMP KIT, SHOWN ASSEMBLED
SIZE 28

1986221

1986221-1
PART NUMBER

THIS DRAWING IS A CONTROLLED DOCUMENT.

DIMENSIONS: INCHES

TOLERANCES UNLESS OTHERWISE SPECIFIED:
0 PLC ± -
1 PLC ± -
2 PLC ± -
3 PLC ± -
4 PLC ± -
ANGLES ± -

MATERIAL -
FINISH -

DWN S SCHLEGEL 7/18/07
CHK S HEADER 7/18/07
APVD S HEADER 7/18/07
PRODUCT SPEC -
APPLICATION SPEC -
WEIGHT -

Tyco Electronics
Tyco Electronics Corporation
Harrisburg, PA 17105-3608

NAME PLUG ASSEMBLY, 28-24 AND CABLE CLAMP KIT
-

SIZE	CAGE CODE	DRAWING NO	RESTRICTED TO
A2	00779	C-1986221	-

CUSTOMER DRAWING | SCALE 2:1 | SHEET 1 OF 1 | REV A

AMP 1471-9 REV 31MAR2000

Downloaded from Elcodis.com electronic components distributor