THIS DRAWING IS UNPUBLISHED. RELEASED FOR PUBLICATION -,- .
© COPYRIGHT - BY TYCO ELECTRONICS CORPORATION. ALL RIGHTS RESERVED.

LOC	DIST
FT	0

REVISIONS

P	LTR	DESCRIPTION	DATE	DWN	APVD
	E	REVISED PER 0G3B-0548-04	6/22/04	SS	SH

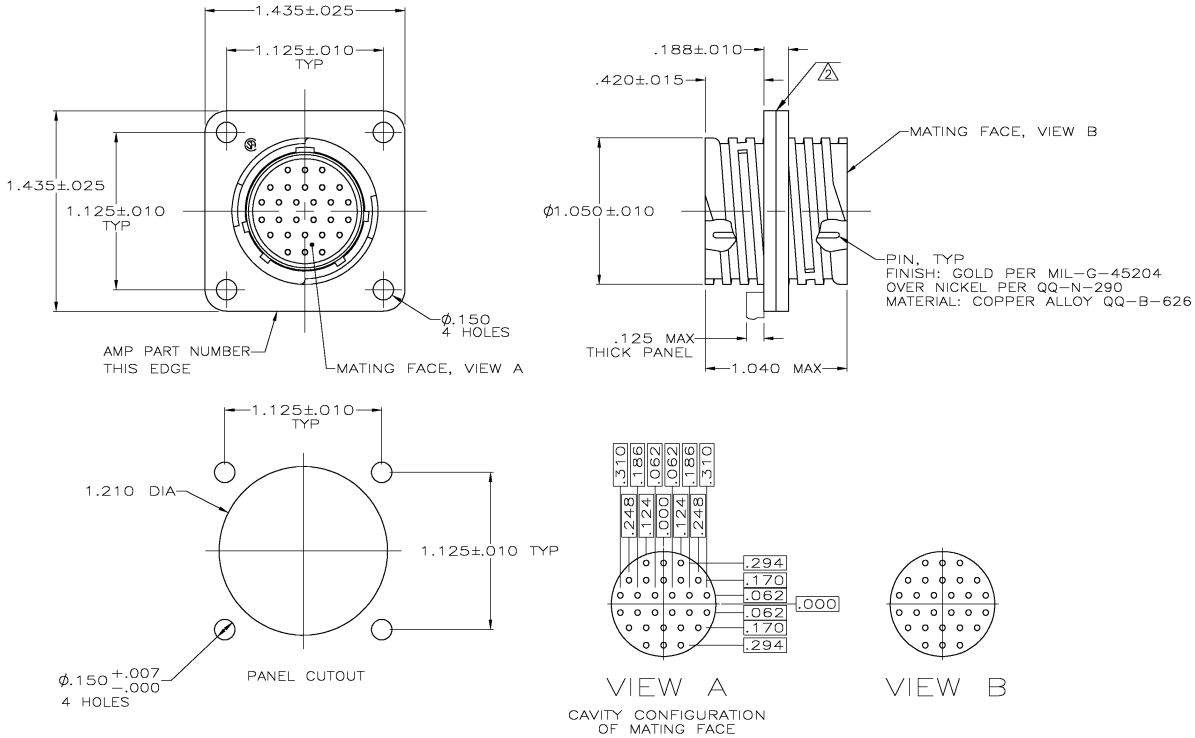

206127-1

PART NUMBER

NOTES:

1. CONNECTOR IS FULLY LOADED WITH SIZE 20 PIN CONTACTS, PERMANENTLY INSTALLED.

2. .012 MAXIMUM GAP PERMISSIBLE BETWEEN CONNECTOR HALVES.

THIS DRAWING IS A CONTROLLED DOCUMENT.

DIMENSIONS: INCHES

TOLERANCES UNLESS OTHERWISE SPECIFIED:
0 PLC ± -
1 PLC ± -
2 PLC ± -
3 PLC ± .005
4 PLC ± -
ANGLES ± -

MATERIAL: RCPT: THERMOPLASTIC
FINISH: SEE CALLOUT

DWN J GALLUCCI BG 5-21-91
CHK W.G.LENKER 4-13-92
APVD —
PRODUCT SPEC 108-10024
APPLICATION SPEC —
WEIGHT —

Tyco Electronics Corporation
Harrisburg, Pa 17105-3608

NAME: RECEPTACLE ASSEMBLY, FEED THRU, SERIES 2, 17-28, CPC

SIZE	CAGE CODE	DRAWING NO	RESTRICTED TO
A2	00779	C-206127	—

CUSTOMER DRAWING | SCALE 2:1 | SHEET 1 OF 1 | REV E

206127

AMP 1471-9 REV 31MAR2000

Downloaded from Elcodis.com electronic components distributor